RZ 752
RZ 760

STIHL

Operator's Manual

WARNING
Read Operator's Manual thoroughly before use and follow all safety precautions. Improper use can cause serious or fatal injury.

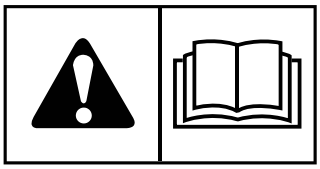

0478-194-3015-A

Copyright © 2024. All rights reserved.

California Proposition 65

WARNING

This product can expose you to chemicals including gasoline engine exhaust, which is known to the State of California to cause cancer and carbon monoxide, which is known to the State of California to cause birth defects or other reproductive harm. For more information go to www.P65Warnings.ca.gov.

WARNING

Battery posts, terminals, and related accessories contain lead and lead compounds, chemicals known to the State of California to cause cancer and birth defects or other reproductive harm. Wash hands after handling.

California Public Resource Code, Section 4442

WARNING

It is a violation of California Public Resource Code, Section 4442, to use or operate the engine on any forest-covered, brush-covered or grass-covered land unless the exhaust system is equipped with a spark arrester, as defined in Section 4442, maintained in effective working order. Other states or federal jurisdictions may have similar laws. Contact an Authorized Service Dealer to obtain a spark arrester designed for the exhaust system installed on this engine.

Table of Contents:

General Information....4

Identifying Your Unit.... 4

Operator Safety.... 5

Safety Alert Symbol and Signal Words.... 5

Safety Decals and Symbols.... 5

Safety Symbols for Optional Jack Kit Accessory....8

Safety Instructions....8

Slope Identification Guide.... 16

Safety Interlock System....16

Features and Controls....17

Control Functions and Locations....17

Zero-Turn Riding Mower Controls....17

Instrument Control Panel - Units with Briggs & Stratton Fuel Injected Engines....19

Instrument Control Panel - Units with Kawasaki Fuel Injected Engines.... 19

Instrument Control Panel - Units with Kawasaki Carbureted Engines....20

Operation.... 22

Before First Time Operation....22

Checks Before Starting.... 22

Starting the Engine - Fuel Injected Models.... 22

Starting the Engine - Fuel Injected Models with Throttle Control Rocker Switch....23

Starting the Engine - Carbureted Models....23

Stopping the Zero-Turn Riding Mower.... 23

Zero-Turn Riding Mower Driving Practice.... 23

Mowing....25

Mowing Recommendations.... 25

Pushing the Unit By Hand....27

Raise and Lower the Roll Bar.... 28

Attaching a Trailer.... 29

Storage.... 29

Maintenance Schedule.... 31

Maintenance Procedures.... 31

Service and Maintenance Safety.... 31

Before Maintaining Your Unit.... 31

Checking/Adding Fuel.... 32

Replacing the Fuel Filter.... 32

Check Engine Oil Level....32

Briggs & Stratton Vanguard Engines with Remote Oil Tank (Select Models).... 32

Changing the Engine Oil and Filter (Engines with Remote Oil Tank)....33

Changing the Engine Oil and Filter (Models with Kawasaki Engines).... 34

Clean the Engine Compartment with Air and Water.....35

Engine Maintenance....35

Containing Spilled Fluids and Proper Disposal of Waste....35

Electronic Fuel Injection (EFI) System - EFI Models 35

Servicing the Exhaust System.... 35

Fuse Identification and Location.... 36

Check / Fill Transmission Oil Level....36

Transmission Oil Filter Change....37

Purging the Air from the Hydraulic System.... 37

Checking Tire Pressures....37

Lubrication.... 37

Lubricating the Front Suspension Arms.... 38

Lubricating the Front Casters....39

Servicing the Mower Blades....39

Seat Adjustment.... 41

Ground Speed Control Lever Adjustment.... 41

Speed Balancing Adjustment.... 41

Cutting Height Adjustment....42

Foot Pedal Adjustment....42

Floor Pan Removal & Installation....42

Neutral Adjustment....43

Return-to-Neutral Adjustment....43

Neutral Lockout Adjustment.... 44

Parking Brake Adjustment....44

Deck Lift Rod Timing Adjustment....45

Deck Leveling Adjustment....46

Deck Lift Assist Spring.... 47

Long Left Hand Deck Belt Replacement.... 47

Short Right Hand Deck Belt Replacement.... 48

Transmission Drive Belt Replacement.... 49

Suspension Adjustment....49

Battery Maintenance....51

Troubleshooting.... 53

Troubleshooting Charts.... 53

Troubleshooting Common Cutting Problems....54

Specifications.... 56

Limited Warranty....57

General Information

Thank you for purchasing this quality-built STIHL zero-turn riding mower. We're pleased that you've placed your confidence in the STIHL brand.

The manuals included with this unit contain safety information to make you aware of the hazards and risks associated with the unit and how to avoid them. This zero-turn riding mower was designed to be used as described in the operator's manual for finish cutting of established lawns and is not intended for any other purpose. It is important that you read and understand the instructions thoroughly before attempting to start or operate this equipment.

Save these original instructions for future reference.

The images in this document are representative, and are meant to complement the instructional copy they accompany. Your unit may vary from the images displayed. *LEFT* and *RIGHT* are as seen from the operator's position.

Have your authorized STIHL servicing dealer show you how to operate your zero-turn riding mower.

Do not lend or rent your unit without this operator's manual. Allow only persons who have the proper training and fully understand the information in this manual to operate the zero-turn riding mower.

For further information, or if you do not understand any of the instructions in this manual, please go to or contact your authorized STIHL servicing dealer.

Recycle all packaging, used oil, and batteries according to applicable government regulations.

Identifying Your Unit

The following products are covered by this manual:

RZ 752.0i, RZ 752.0i K, RZ 752.0 K, RZ 760.0i, RZ 760.0i K & RZ 760.0 K

The product identification tag (A, Figure 1) can be found in the location as shown in Figure 1.

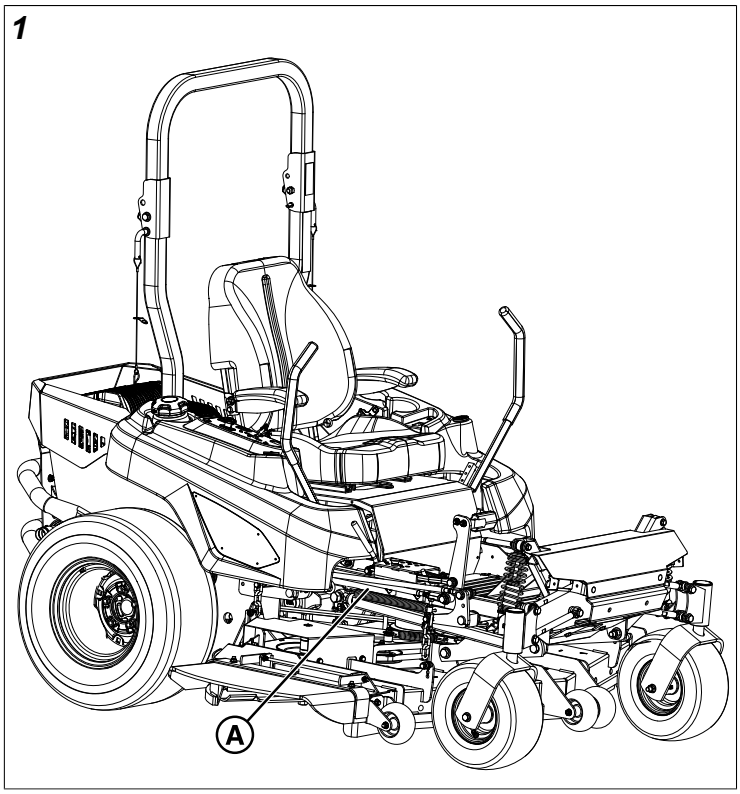

Record your model number, product serial number, engine model number and engine serial number in the space provided for easy access.

When contacting your authorized STIHL servicing dealer for replacement parts, service or information you MUST have these numbers.

Note: For the location of the engine identification numbers refer to the engine operator's manual.

PRODUCT REFERENCE DATA	
Unit Model Number:	
Unit Serial Number:	
Dealer Name:	
Date Purchased:	

ENGINE REFERENCE DATA	
Engine Make:	
Engine Model:	
Engine Type / Specification:	
Engine Code / Serial Number:	

Operator Safety

Safety Alert Symbol and Signal Words

The safety alert symbol ⚠ identifies safety information about hazards that can result in personal injury. A signal word (**DANGER**, **WARNING**, or **CAUTION**) is used with the alert symbol to indicate the likelihood and the potential severity of injury. In addition, a hazard symbol may be used to represent the type of hazard.

⚠ **DANGER** indicates a hazard which, if not avoided, **will** result in death or serious injury.

⚠ **WARNING** indicates a hazard which, if not avoided, **could** result in death or serious injury.

⚠ **CAUTION** indicates a hazard which, if not avoided, **could** result in minor or moderate injury.

NOTICE indicates information considered important but not hazard-related.

Safety Decals and Symbols

Read the safety decals before operating your unit. The cautions and warnings are for your safety. Understand and follow all safety decals to avoid a personal injury or damage to the unit.

⚠ **WARNING**

If any safety decals become worn or damaged and cannot be read, order replacement decals from your local authorized STIHL servicing dealer.

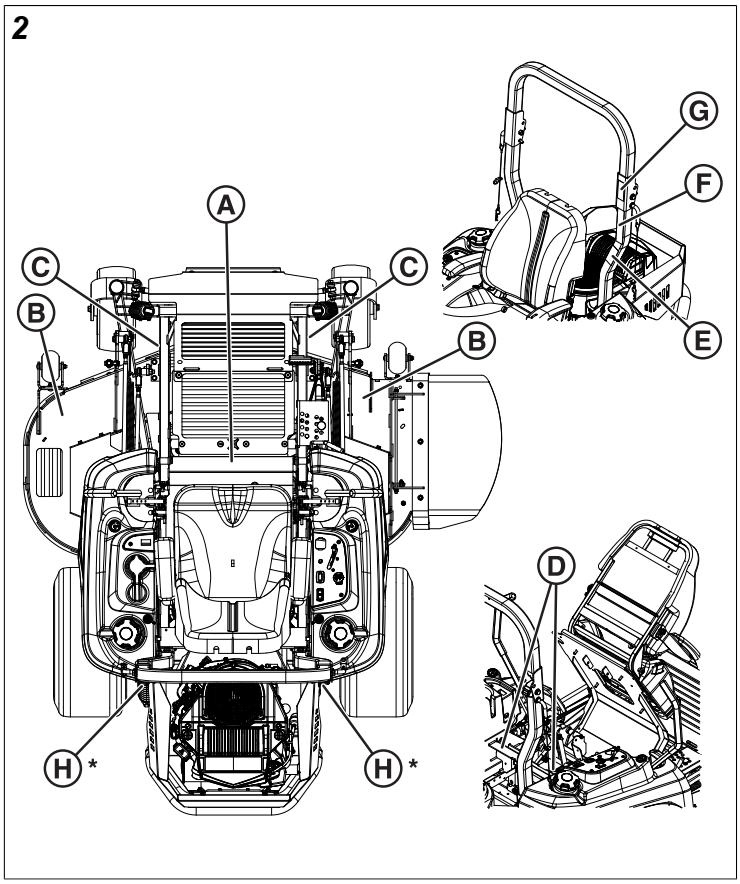

* Located on the frame of the unit near the base of the roll bar.

A. **Part Number: WB05-967-7500 - Decal, Main Safety**

B. **Part Number: WB01-967-7200 - Decal, Danger, Cut, Hand/Foot**

C. **Part Number: WB05-967-7505 - Decal, Warning, Pinch Point**

D. **Part Number: WB05-967-7515 - Decal, Warning, Hand in Belt**

E. **Part Number: WB03-967-7505 - Decal, Warning, Folding Roll Bar**

F. **Part Number: WB03-967-7510 - Decal, Caution, Folding Roll Bar**

G. **Part Number: WB03-967-7500 - Decal, Warning, Roll Bar and Overhead Obstacles**

H. **Part Number: WB05-967-7510 - Decal, Warning, Roll Bar Removed**

Decal, Main Safety

Part Number: WB05-967-7500

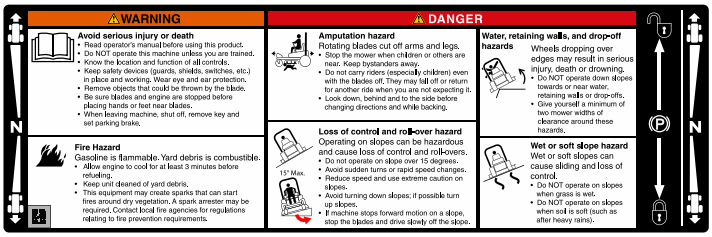

WARNING

Avoid serious injury or death.

- Read operator's manual before using this product.
- Do NOT operate this machine unless you are trained.
- Know the location and function of all controls.
- Keep safety devices (guards, shields, switches, etc.) in place and working. Wear eye and ear protection.
- Remove objects that could be thrown by the blade.
- Be sure blades and engine are stopped before placing hands or feet near blades.
- When leaving machine, shut off, remove key and set parking brake.

WARNING

Fire hazard.

Gasoline is flammable. Yard debris is combustible.

- Allow engine to cool for at least 3 minutes before refueling.
- Keep unit cleaned of yard debris.
- This equipment may create sparks that can start fires around dry vegetation. A spark arrester may be required. Contact local fire agencies for regulations relating to fire prevention requirements.

DANGER

Amputation hazard.

Rotating blades cut off arms and legs.

- Stop the mower when children or others are near. Keep bystanders away.
- Do not carry riders (especially children) even with the blades off. They may fall off or return for another ride when you are not expecting it.
- Look down, behind and to the side before changing directions and while backing.

DANGER

Loss of control and roll-over hazard.

15° Max.

Operating on slopes can be hazardous and cause loss of control and roll-overs.

- Do not operate on slope over 15 degrees.
- Avoid sudden turns or rapid speed changes.
- Reduce speed and use extreme caution on slopes.
- Avoid turning down slopes; if possible turn up slopes.
- If machine stops forward motion on a slope, stop the blades and drive slowly off the slope.

DANGER

Water, retaining walls, and drop-off hazards.

Wheels dropping over edges may result in serious injury, death or drowning.

- Do NOT operate down slopes towards or near water, retaining walls or drop-offs.
- Give yourself a minimum of two mower widths of clearance around these hazards.

DANGER

Wet or soft slope hazard.

Wet or soft slopes can cause sliding and loss of control.

- Do NOT operate on slopes when grass is wet.
- Do NOT operate on slopes when soil is soft (such as after heavy rains).

Decal, Danger, Cut Hand/Foot

Part Number: WB01-967-7200

DANGER

Keep hands and feet away from deck.

Do not operate mower unless discharge chute or entire grass catcher is in its proper place.

Decal, Warning, Pinch Point

Part Number: WB05-967-7505

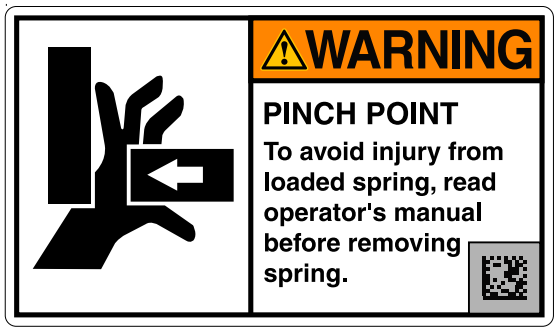

WARNING

Pinch Point.

To avoid injury from loaded spring, read operator's manual before removing spring.

Decal, Warning, Hand in Belt

Part Number: WB05-967-7515

WARNING

Amputation and Pinch Point Hazard.

To avoid injury from rotating parts, stay clear of parts and keep all shields and guards in place.

Decal, Warning, Folding Roll Bar

Part Number: WB03-967-7505

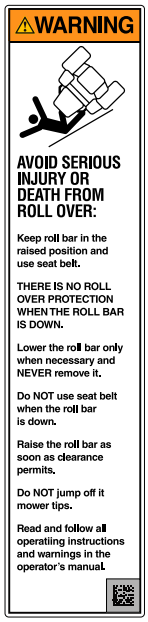

WARNING

Avoid serious injury or death from roll over.

- Keep roll bar in the raised and locked position and use seat belt.
- There is no roll over protection when the roll bar is down.
- Lower the roll bar only when necessary and never remove it.
- Do not use seat belt when the roll bar is down.
- Raise the roll bar as soon as clearance permits.
- Do not jump off if mower tips.
- Read and follow all operating instructions and warnings in the operator's manual.

Decal, Caution, Folding Roll Bar

Part Number: WB03-967-7510

WARNING

Roll Over Protective Structure.
To maintain operator protection and roll bar certification:

- Replace a damaged roll bar, do not attempt to repair or modify.
- Any alteration of the roll bar must be approved by the manufacturer.
- Do not exceed the machine weight rating of the roll bar.

Decal, Warning, Roll Bar and Overhead Obstacles

Part Number: WB03-967-7500

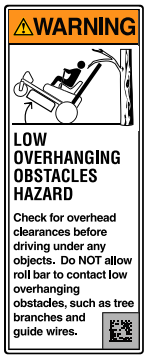

WARNING

Low overhanging obstacles hazard.

- Check for overhead clearances before driving under any objects. Do not allow roll bar to contact low overhanging obstacles, such as tree branches and guide wires.

Decal, Warning, Roll Bar Removed

Part Number: WB05-967-7510

WARNING

Avoid serious injury or death from rollover.

- Do not operate without the roll bar installed and operational.

Safety Symbols for Optional Jack Kit Accessory

An optional jack kit is available as an accessory through your authorized STIHL servicing dealer. Please see the explanations below for the safety symbols displayed on the jack kit.

1.) Warning - Read the Operator's Manual.

2.) Crushing Hazard, Mower: (1.) Park unit on flat level ground and engage the parking brake; (2.) Stop the engine and remove the ignition key; (3.) Properly jack the unit and secure with jack stands before working under the unit.

A replacement decal can be ordered through your local authorized STIHL servicing dealer.

Safety Instructions

General Safety

WARNING

- Read, understand, and follow the instructions and warnings in this manual and on the unit, engine, and attachments before you operate this unit.
- Failure to read and follow these safety instructions could result in loss of control of the unit, severe personal injury, or death to you, or bystanders, or damage to property or equipment. This mowing deck is capable of amputating hands and feet and throwing objects.
- Do not operate this unit unless you have been trained. The owner is responsible for training the users. Reading and understanding this operator's manual is a way to train yourself.
- If the operator(s) or mechanic(s) cannot read English it is the owner’s responsibility to explain this material to them. Other language translations of this manual may be available. See your authorized STIHL servicing dealer.
- Power equipment is only as safe as the operator. If it is misused, or not properly maintained, it can be dangerous. The owner/user can prevent, and is responsible for, accidents or injuries occurring to themselves, other people, or property.
- Only let adults who are responsible, trained, familiar with the instructions, and physically capable to operate the unit.
- Never let children or untrained people operate or service the unit. Local regulations may restrict the age of the operator.
- Do not operate the unit while under the influence of alcohol or drugs.
- Never use a smart phone, tablet, or other electronic device while operating. Distracted operation can increase the risk of accident or personal injury.
- Wear appropriate personal protective equipment such as safety shoes, long pants, safety glasses, and ear

protection. Long hair, loose clothing or jewelry may get tangled in moving parts.

- Use common sense, and think through what you are doing. If you are not sure that the task you are about to perform can be safely done with the equipment you have chosen, ask a professional: contact your authorized STIHL servicing dealer.
- Do not put hands or feet near rotating parts or under the unit. Keep clear of the discharge opening at all times.
- Keep the unit in good working order. Replace worn or damaged parts.
- Use full width ramps when you load and unload the unit for transport.
- Use care with grass catchers or other attachments. These can change the stability of the unit. See attachment or accessory manual or contact your authorized STIHL dealer for information on proper wheel weights or counterweights.
- To help prevent fires, keep the unit free of grass, leaves, or other unwanted material. Clean remaining oil or fuel spillage. Remove fuel soaked debris and let the unit cool before storage.

Read the Manual

WARNING

The operator's manual contains important safety information you need to be aware of, understand, and apply BEFORE you operate your unit and DURING operation.

Safe operating techniques, an explanation of the product’s features and controls, and maintenance information is included to help you get the most out of your investment.

Read this operator's manual thoroughly before use and follow all safety precautions. Improper use can cause serious or fatal injury.

Children

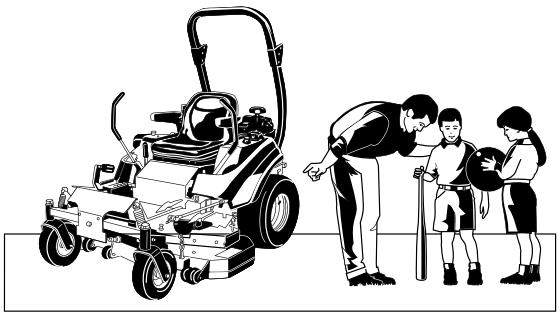

WARNING

Tragic accidents can occur if the operator is not alert to the presence of children. Do not allow children anywhere near the area of operation. Children are often attracted to the unit and the mowing activity. Never assume that children will remain where you last saw them. If there is a risk that children may enter the area where you are mowing, have another responsible adult watch them.

- Keep children out of the mowing area and under the watchful care of another responsible adult other than the operator.
- Be alert and turn the unit off if children enter the area.
- Always look down, behind, and to the side for children before changing directions and while backing.
- Before and during reverse operation, look behind and down for small children.
- Never carry children, even with the blade(s) off. They may fall off and be seriously injured or interfere with safe unit operation. Children who have been given rides in the past may suddenly appear in the mowing area for another ride and be run over or backed over by the unit.
- Never allow children to operate the unit.
- Use care when approaching blind corners, shrubs, trees, or other objects that may obscure vision.

Operation

WARNING

- Clear the operating area of any objects which could be thrown by or interfere with operation of the unit.
- Only operate in daylight or good artificial light. The LED lights supplied with the unit or as an accessory contribute to visibility but are not considered good artificial light suitable for night time mowing.
- Keep away from holes and hidden hazards.
- Do not operate on public roads.
- Never operate the unit without guards securely in place. Be sure all interlocks are attached, adjusted, and functioning properly.
- Stop the unit on level ground, disengage the PTO, engage the parking brake, and shut off the engine before leaving the operator's position for any reason including emptying the grass catchers or unclogging the chute.
- Never carry passengers and keep pets and bystanders away.
- Do not direct discharge material toward anyone. Avoid discharging material against a wall or obstruction. Material may ricochet back toward the operator. Stop the blade(s) when crossing gravel surfaces or when you are not mowing.
- Use care when approaching blind corners, shrubs, trees, or other objects that may obscure vision.
- Do not change the engine governor setting or overspeed the engine.
- To help prevent fires, keep the unit free of grass, leaves, or other unwanted material. Clean remaining oil or fuel spillage. Remove fuel soaked debris and let the unit cool before storage.

Starting

WARNING

- Only operate in well ventilated areas. Exhaust gases contain carbon monoxide, a deadly poison.
- Be sure all drives are in neutral and parking brake is engaged before starting engine. Only start engine from the operator's position. Use seat belts when the roll bar is in the raised and locked position.

Mowing

WARNING

- Do not mow in reverse unless absolutely necessary. Always look down, behind, and to the side before changing directions and while backing.
- Do not direct discharge material toward anyone. Avoid discharging material against a wall or obstruction. Material may ricochet back towards the operator. Stop the blade(s) when crossing gravel surfaces. Do not operate the mower without either the entire grass catcher or the deflector in place.
- Slow down and use caution when making turns and when changing directions on slopes.
- Never raise deck with the blades running.
- Never leave a running unit unattended. Always disengage the PTO, set parking brake, stop engine, and remove keys before dismounting. Keep hands and feet away from the blades.
- Turn off the PTO switch to disengage the blades when not mowing.
- Never operate without guards securely in place. Be sure all interlocks are attached, adjusted properly and functioning properly.
- Never operate with the discharge deflector raised, removed or altered, unless using a grass catcher.
- Stop on level ground, disengage the PTO, engage the parking brake, shut off the engine before leaving the operator's position for any reason including emptying the grass catchers or unclogging the chute.
- Stop equipment and inspect blades after striking objects or abnormal vibration occurs. Make necessary repairs before resuming operations.
- Keep hands and feet away from the blades.

Moving Parts

WARNING

This unit has many moving parts that can injure you or someone else. Remain seated during operation and follow the safety instructions in this operator's manual to reduce the risk of injury.

The mower deck has spinning mower blades that can amputate hands and feet. Do not allow anyone near the unit while it is running. Keep safety devices (guards, shields, and switches) in place and working.

This zero-turn riding mower is equipped with an operator presence interlock system. Do NOT attempt to alter or bypass the system. See your authorized STIHL servicing dealer immediately if the system does not pass all the safety interlock system tests found in this manual.

Check that operator's presence controls, safety switches and shields are attached and functioning properly. Do not operate unless they are functioning properly.

Slope Operation

WARNING

Operation on slopes can be dangerous. Using the unit on a slope that is too steep where you do not have adequate wheel traction (and control) can cause sliding, loss of steering, control, and possible roll over. Do not operate the unit under any condition where traction, steering, or stability is in question. Tires could slide even if the wheels are stopped. Do not operate on a slope greater than 15 degrees (a 5.4 foot rise over a 20 foot length).

Avoid turning down slopes; if possible turn up slopes. Avoid sudden turns or rapid speed changes. Reduce speed and use extreme caution on ALL slopes.

The surface condition you are on can greatly impact your ability to safely operate this unit. Operating on wet or slippery slopes can cause sliding and loss of steering and control. Do not operate on slopes that are slippery, wet, or have soft soil conditions.

If you feel uncomfortable about operating the unit on a slope, don’t do it.

WARNING

Slopes are a major factor related to loss-of-control and tipover accidents, which can result in severe injury or death. All slopes require extra caution. If you cannot back up the slope or if you feel uneasy on it, do not drive on it.

Do not use this unit on slopes greater than 15 degrees.

Select slow ground speed before driving onto slope. Use extra caution when operating on slopes with rear-mounted grass catchers.

Avoid turning down slopes; if possible turn up slopes. Use caution when changing direction and do not start or stop on a slope.

Do:

- Remove obstacles such as rocks, tree limbs, etc.
- Evaluate the terrain to determine what accessories and attachments are needed to properly and safely perform the job. Use only accessories and attachments approved by the manufacturer.
- Avoid holes, ruts, bumps, rocks, or other hidden hazards. Uneven terrain could overturn the unit, or cause the operator to lose their balance or footing. Tall grass can hide obstacles.
- Slow down and use extra care on slopes. Be sure to travel in the recommended direction on slopes. Turf conditions can affect the unit's stability. Use caution when operating near drop-offs.
- Slow down and use caution when making turns and when changing directions on slopes.
- Use slow speed. Choose a slow speed so that you will not have to stop or change speed while on the slope.
- Keep all movement on the slopes slow and gradual. Do not make sudden changes in speed or direction.
- Use care with grass catchers or other attachments. These can change the stability of the unit. See your attachment or accessory manual or contact your authorized STIHL dealer for information on proper wheel weights or counterweights.

Do NOT:

- Avoid starting, stopping, or turning on a slope. Do NOT make sudden changes in speed or direction, which could cause the mower to roll over.
- Do not mow down slopes towards or near drop-offs, ditches, or embankments. The mower could suddenly turn over if a wheel is over the edge of a cliff or ditch, or if an edge caves in. Give yourself a minimum of two mower widths of clearance around these hazards.
- Do not mow on wet grass. Reduced footing or traction could cause sliding.
- Do not try to stabilize the unit by putting your foot on the ground.
- Do not mow excessively steep slopes.
- Do not use grass catcher on steep slopes.
- Do not mow slopes if you cannot back up them.

Roll Over Protection System (ROPS) Instructions

Your model is equipped with a Roll Over Protection System (ROPS) that consists of a folding roll bar and a seat belt.

WARNING

Keep the roll bar in the raised and locked position and fasten the seat belt. There is no roll over protection when the roll bar is down. Do not jump off if the mower tips (it is safer to be secured by the seat belt with the roll bar raised).

Lower the roll bar only when necessary (such as to temporarily clear a low overhanging obstacle) and NEVER remove it. Do NOT use the seat belt when the roll bar is down. Raise the roll bar as soon as clearance permits.

WARNING

In order to avoid serious injury or death from roll over, it is important to follow the warnings listed below.

Operational Warnings

WARNING

- Always use the seat belt when the roll bar is in the raised and locked position.
- Never use the seat belt when the roll bar is in the down position.
- Remember there is no roll over protection when the roll bar is in the down position so it is very important to always keep the roll bar in the raised and locked position whenever possible.
- Lower the roll bar to the down position only when it is absolutely necessary.
- Check for overhead clearances before driving under any objects. Do not allow roll bar to contact low overhanging obstacles such as tree branches and guide wires.
- Never remove the roll bar or seat belt from the vehicle.
- Do not exceed the machine weight rating of the roll bar.
- Read and follow all of the instructions shown below regarding the inspection and maintenance of the ROPS.

Inspection of the Roll Bar

WARNING

Failure to properly inspect and maintain the roll bar can result in serious injury or death.

A roll bar, like any other safety device, needs to be periodically inspected to verify that the integrity of the device has not been compromised through normal machine use, misuse, age degradation, modifications, or a roll over.

To maintain operator roll over protection and roll bar effectiveness:

- If a roll bar becomes damaged for any reason, such as a collision, roll over, or impact, the roll bar must be replaced. Small undetectable cracks can reduce the effectiveness of the roll bar. Never weld, straighten, or repair the roll bar.
- Never alter the roll bar by welding anything to it or by drilling additional holes.
- **BEFORE FIRST TIME USE** - Inspect the roll bar structure and mounting hardware for:
  1. Check to make sure the machine's gross vehicle weight, including attachments, restrained payload, fuel and operator, is not in excess of the maximum weight specified on the roll bar label.
  2. Make sure there isn't any missing, damaged, or loose mounting hardware.
  3. Make sure the roll bar has been correctly and completely installed.
- **EVERY 100 HOURS** - Inspect the roll bar structure and mounting hardware for:
  1. Any cracks in the structure (structural members and/or welds).
  2. Significant corrosion on any part of the roll bar structure or hardware.
  3. Missing, damaged, or loose mounting hardware.
  4. Mounting hardware that is of a grade lesser than specified.
  5. Unit gross vehicle weight, including attachments, restrained payload, fuel and operator, in excess of the maximum weight specified on the roll bar label.
  6. Any modifications that have been made, such as unauthorized welds and/or holes.
  7. Any permanent deformation or twisting of the roll bar structure.
  8. That the roll bar label is still in place and is readable.
  9. That the ROPS on-product warning labels are still on the roll bar and are readable.
- If there is any doubt as to the condition of the roll bar, remove the unit from service and contact your authorized STIHL servicing dealer for assistance.

Inspection and Maintenance of the Seat Belt

WARNING

Failure to properly inspect and maintain the seat belt can result in serious injury or death.

3

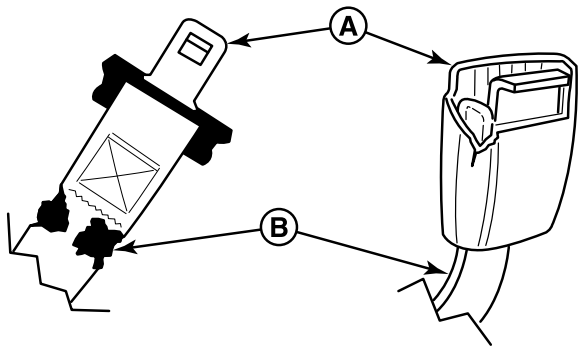

- The seat belt like the roll bar, needs to be periodically inspected to verify that the integrity has not been compromised through normal machine use, misuse,

age degradation, modifications, or a roll over. If the seat belt does not pass all of the following tests, it should be replaced.

- BEFORE EACH USE – Conduct the following inspections/maintenance of the seat belt and retraction mechanism:
  1. Check for dirt or debris in the retraction mechanism. If dirt or debris is found, it should be removed.
  2. Check to make sure the retraction mechanism retracts easily and completely.
  3. Check for damage to any part of the seat belt (A, Figure 3) such as nicks, cuts, loose stitching, or fraying.
  4. Check that the buckle and latch (B) operate properly and that the latch plate is not excessively worn, deformed, or the buckle is damaged or cracked. The seat belt should latch and release easily.

Retaining Walls, Drop-Offs, and Water

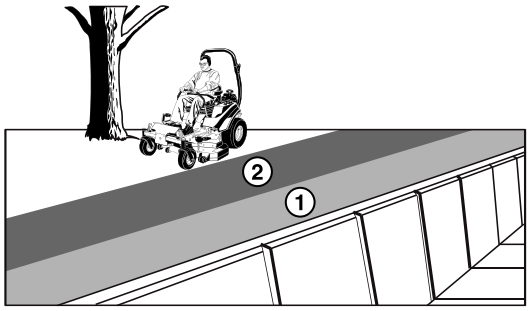

WARNING

Retaining walls and drop-offs around steps and water are a common hazard. Do NOT operate down slope towards or near water, retaining walls, or drop-offs.

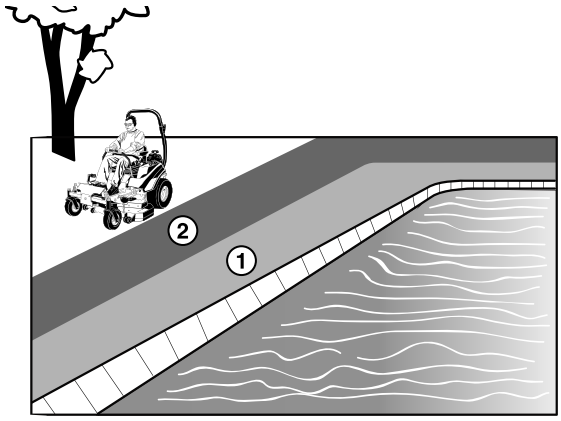

WARNING

Give yourself a minimum of two mower widths of clearance around these hazards and hand-trim with a walk behind mower or string trimmer. Wheels dropping over retaining walls, edges, ditches, embankments, or into water can cause rollovers, which may result in serious injury, death, or drowning.

Thrown Objects

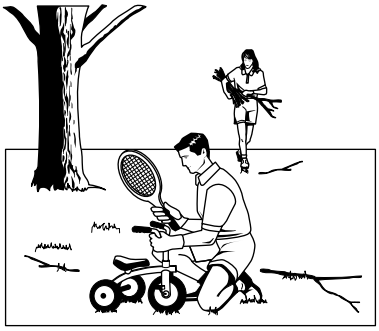

WARNING

This unit has spinning mower blades. These blades can pick up and throw debris that could seriously injure a bystander. Clear the operating area of any objects which could be thrown by, or interfere with operation of, the unit.

Do not operate the unit without the entire grass catcher, discharge chute, or other safety devices in place and functioning properly. Check frequently for signs of wear or deterioration and replace as needed.

Do not allow anyone in the area while the unit is running. If someone enters the area, shut the unit off immediately, and wait until they leave to re-start the unit.

Overhead Obstacles

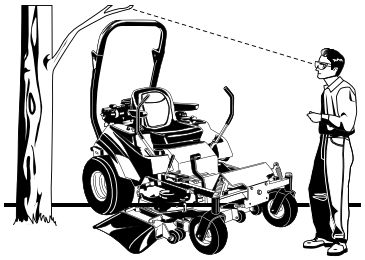

WARNING

Check for overhead clearances before driving under any objects. Do not allow the roll bar to contact low overhanging obstacles such as tree branches and guide wires.

Fuel and Maintenance

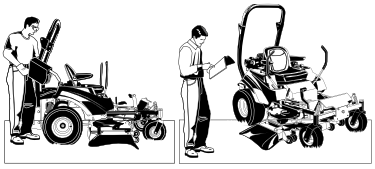

WARNING

Always disengage all drives, shut off the engine, and remove the key before doing any cleaning, refueling, or servicing.

Fuel and its vapors are extremely flammable. Do not smoke while operating or fueling. Do not add fuel while engine is hot or running. Allow engine to cool for at least three (3) minutes prior to adding fuel.

Do not add fuel indoors, in an enclosed trailer, garage, or any other enclosed area that is not well ventilated. Fuel spills should be cleaned up promptly and before operation begins.

Fuel should be stored only in sealed containers approved for fuel.

Proper maintenance is critical to the safety and performance of your unit. Keep the unit free of grass, leaves, and excess oil. Be sure to perform the maintenance procedures listed in this manual, especially periodically testing the safety system.

WARNING

To avoid personal injury or property damage, use extreme care in handling fuel. Fuel is extremely flammable and the vapors are explosive.

- Extinguish all cigarettes, cigars, pipes, and other sources of ignition.
- Use only approved fuel containers.
- Never remove the fuel cap or add fuel with the engine running or while hot. Allow the engine to cool for three (3) minutes before adding fuel.
- Never add fuel to, or drain fuel from, the unit indoors.
- Never store the unit or fuel container where there is an open flame, spark, or pilot light such as near a water heater or other appliance.
- Never fill fuel containers inside a vehicle or on a truck bed with a plastic bed liner. Always place containers on the ground away from your vehicle before filling.
- Remove fuel-powered equipment from the truck or trailer and refuel it on the ground. If this is not possible, then refuel such equipment on a trailer with a portable container, rather than from a fuel dispenser nozzle.
- Keep nozzle in contact with the rim of the fuel tank or container opening at all times until fueling is complete. Do not use a nozzle lock-open device.
- If fuel is spilled on clothing, change clothing immediately.
- Never over-fill the fuel tank. Replace fuel cap and tighten securely.
- Use care in handling fuels. They are flammable and vapors are explosive.
- If fuel is spilled, do not attempt to start the engine but move the unit away from the area of spillage and avoid creating any source of ignition until fuel vapors have dissipated.
- Replace all fuel tank caps and fuel container caps securely.

WARNING

- Keep all hardware, especially blade attachment bolts, tight and keep all parts in good working condition. Replace all worn or damaged parts.
- Never tamper with safety devices. Check their proper operation regularly.
- Disengage the PTO, set the parking brake, stop the engine and remove the ignition key and/or disconnect spark plug wire. Wait for all movement to stop before adjusting, cleaning, or repairing.
- Clean grass and debris from mower deck, drives, mufflers, and engine to prevent fires. Clean up oil or fuel spillage.
- Stop and inspect the equipment if you strike an object. Repair, if necessary, before restarting.
- Park the unit on level ground. Never allow untrained personnel to service the unit.
- Use jack stands to support components when required.
- Carefully release pressure from components with stored energy.
- Disconnect the battery cables or remove the spark plug wire(s) before making any repairs. Disconnect the negative terminal first and the positive last. Reconnect positive first and negative last.
- Use care when checking blades. Wrap the blade(s) with a shop towel or wear gloves, and use caution when servicing them. Only replace blades. Never straighten or weld them.
- Keep hands and feet away from moving parts. If possible, do not make adjustments with the engine running.
- Charge batteries in an open, well ventilated area, away from spark and flames. Unplug the charger before connecting or disconnecting from the battery. Wear protective clothes and use insulated tools.
- Grass catcher components are subject to wear, damage, and deterioration, which could expose moving parts or allow objects to be thrown. Frequently check components and replace with manufacturer’s recommended parts, when necessary.
- Check brake operation frequently. Adjust and service as required.
- Use only STIHL recommended replacement parts when making repairs.
- Always comply with factory specifications on all settings and adjustments.
- Only authorized STIHL servicing dealers should be utilized for major service and repair requirements.
- Never attempt to make major repairs on this unit unless you have been properly trained. Improper service procedures can result in hazardous operation, equipment damage and voiding of manufacturer’s warranty.

WARNING

Units with hydraulic pumps, hoses, or motors: Hydraulic fluid escaping under pressure may have sufficient force to penetrate skin and cause serious injury. If foreign fluid is injected into the skin it must be surgically removed within a few hours by a doctor familiar with this form of injury or gangrene may result. Keep body and hands away from pin holes or nozzles that eject hydraulic fluid under high pressure. Use paper or cardboard, and not hands, to search for leaks. Make sure all hydraulic fluid connections are tight and all hydraulic hoses and lines are in good condition before applying pressure to the system. If leaks occur, have the unit serviced immediately by your authorized STIHL servicing dealer.

WARNING

Stored energy device. Improper release of springs can result in serious personal injury. Springs should be removed by an authorized STIHL servicing dealer.

WARNING

Units equipped with an engine radiator: Stored energy device. To prevent serious bodily injury from hot coolant or steam blow-out, never attempt to remove the radiator cap while the engine is running. Stop the engine and wait until it is cool. Even then, use care when removing the cap.

Enclosed Areas

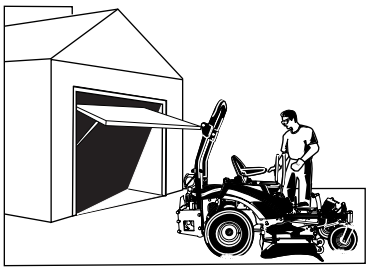

WARNING

Only operate this unit outdoors and away from unventilated areas such as inside enclosed trailers and garages.
The engine emits poisonous carbon monoxide gas and prolonged exposure in an enclosed area can result in serious injury or death.

Towed Equipment

WARNING

- Tow only with a unit that has a hitch designed for towing. Do not attach towed equipment except at the hitch point.
- Follow the manufacturer's recommendations for weight limit for towed equipment and towing on slopes. See *Attaching a Trailer* under OPERATION.
- Never allow children or others in or on towed equipment.
- On slopes, the weight of the towed equipment may cause loss of traction and loss of control.
- Travel slowly and allow extra distance to stop.
- Do not shift to neutral and coast down hill.

Emissions

WARNING

- Engine exhaust from this product contains chemicals known, in certain quantities, to cause cancer, birth defects, or other reproductive harm.
- Look for the relevant Emissions Durability Period and Air Index information on the engine emissions label.

Hearing Protection

WARNING

OSHA regulations may require the use of hearing protection when exposed to sound levels greater than 85 dBA for an 8 hour time period.

This unit produces sound levels in excess of 85 dBA at the operator's ear and can cause hearing loss though extended periods of exposure.

Wear ear and eye protection when operating this unit.

Slope Identification Guide

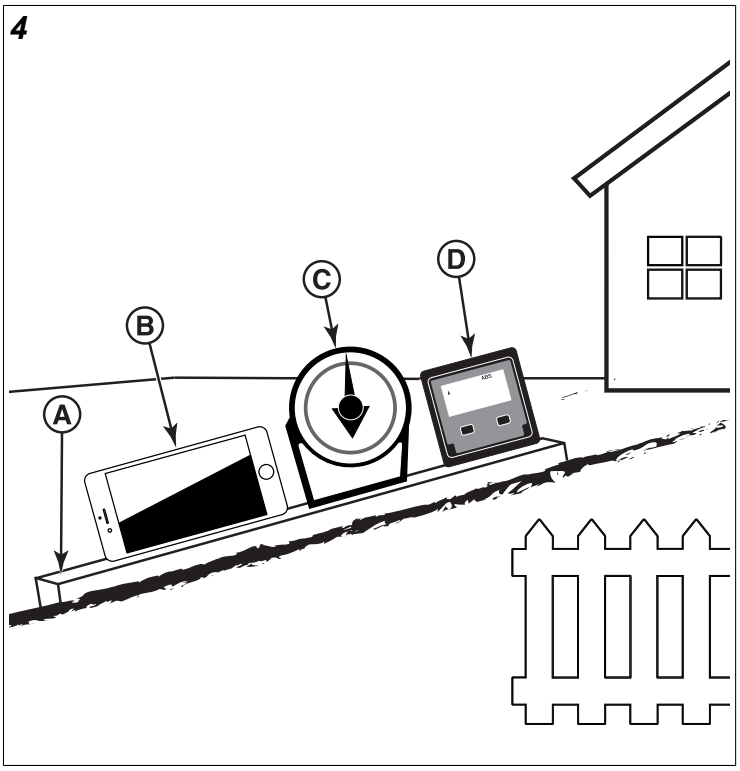

How to measure the slope of a lawn surface with a smartphone or an angle finder tool:

WARNING

To reduce the risk of serious personal injury or death, never operate on slopes greater than 15 degrees.

1. Use a straight edge at least two (2) feet long (A, Figure 4). A 2x4 or a straight piece of metal works well.
2. Angle finder tools:
   a. **Use your smartphone:** Many smartphones (B, Figure 4) have an inclinometer (angle finder) located under the compass application (app). Or, search an app store for an inclinometer app.
   b. **Use angle finder tools:** Angle finder tools (C and D, Figure 4) are available at local hardware stores or online (also called inclinometer, protractor, angle meter, or angle gauge). Dial type (C) or digital type (D) work, others may not. Read and obey the user instructions supplied with the angle finder tool.
3. Put the two (2) feet long straight edge along the steepest part of the lawn slope. Put the board up and down the slope.
4. Lay the smartphone or angle finder tool on the straight edge and read the angle in degrees. This is the slope of your lawn.

Note: A paper gauge slope identification guide is included in your product literature packet.

Safety Interlock System

WARNING

DO NOT operate unit if any safety interlock or safety device is not in place and functioning properly. Contact your authorized STIHL servicing dealer immediately for assistance. DO NOT attempt to defeat, modify, or remove any safety device. Check their operation regularly.

Operational SAFETY Checks

Test 1 - Engine SHOULD NOT crank if:

- PTO switch is engaged, OR
- Parking brake is not engaged.

Test 2 - Engine SHOULD crank if:

- PTO switch is not engaged, AND
- Parking brake is engaged.

Test 3 - Engine should SHUT OFF if:

- Operator rises off seat with PTO engaged, OR
- Operator rises off seat with parking brake disengaged.

Test 4 - Blade Brake Check

The mower blades and mower drive belt should come to a complete stop within seven (7) seconds after electric PTO switch is turned off (or operator rises off seat). If mower drive belt does not stop within seven (7) seconds, see your authorized STIHL servicing dealer.

Note: Once the engine has stopped, PTO switch must be turned off, parking brake must be engaged, and the ground speed control levers must be locked in the NEUTRAL position after the operator returns to the seat in order to start the engine.

Features and Controls

Control Functions and Locations

The information below briefly describes the function of individual controls. Starting, stopping, driving, and mowing require the combined use of several controls applied in specific sequences. To learn what combination and sequence of controls to use for various tasks see the OPERATION section.

Zero-Turn Riding Mower Controls

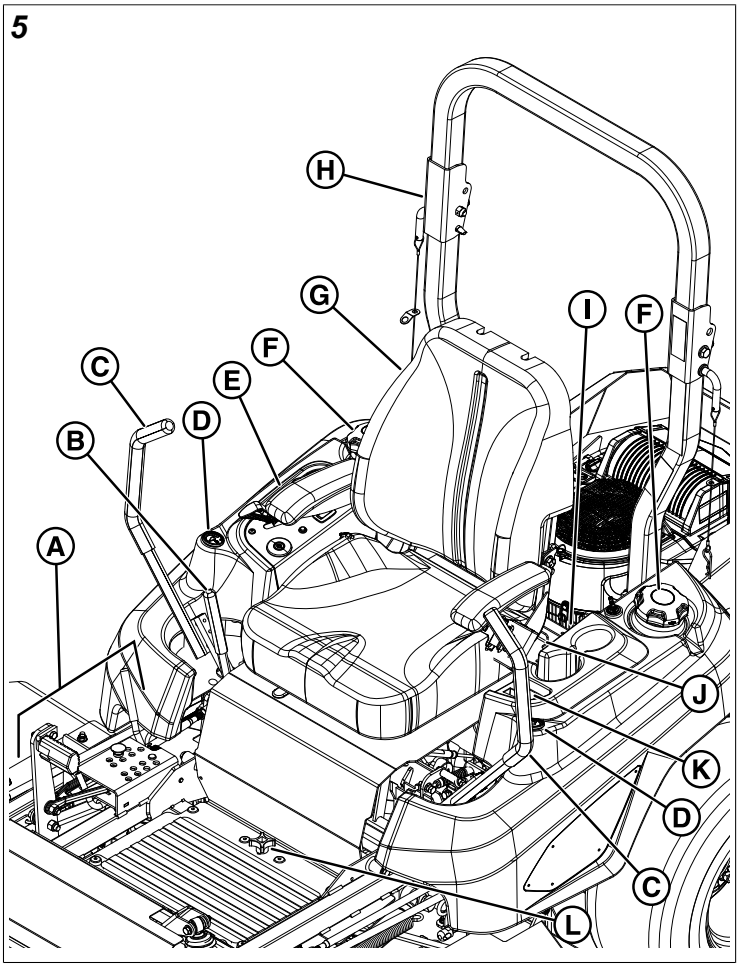

A. **Deck Lift Pedal, Cutting Height Adjustment Pin, and Deck Lift Lock Lever**
B. **Parking Brake Lever**
C. **Ground Speed Control Levers**
D. **Fuel Level Gauge (One per fuel tank)**
E. **Instrument Control Panel**
F. **Fuel Tank Cap**
G. **Seat**
H. **Roll Bar**
I. **Seat Latch**
J. **Fuel Selector Valve**
K. **Dual USB Charging Port**
L. **Removable Floor Plate**
M. **Transmission Oil Fill/Tanks (One per transmission)**
N. **Transmission Release Levers (One per transmission)**

Deck Lift Pedal, Cutting Height Adjustment Pin & Deck Lift Lock Lever: The deck lift pedal (A, Figure 6), the cutting height adjustment pin (B), and the deck lift lock lever (C) are used together to control the cutting height of the mower deck. See *Cutting Height Adjustment* for instructions on using these controls.

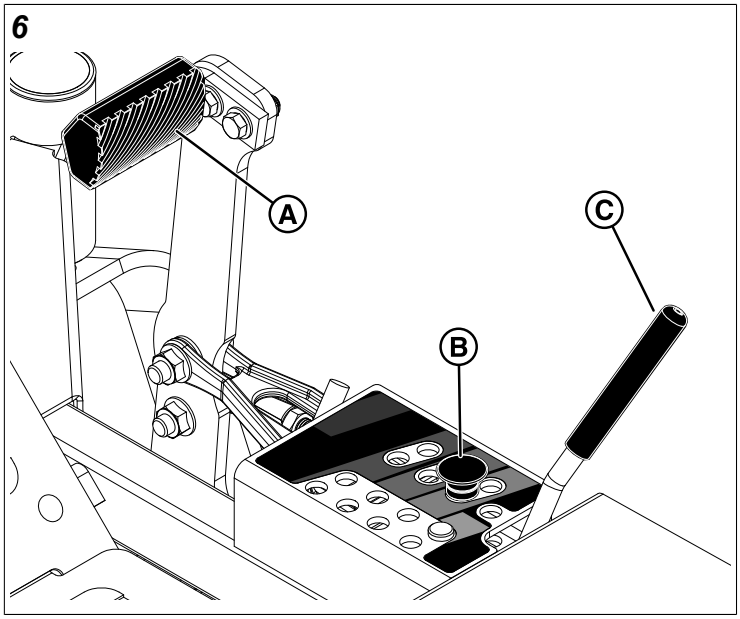

Cutting Height Adjustment	Storage Hole for Cutting Height Adjustment Pin	Deck Lift Lock Lever

Ground Speed Control Levers: These levers control the ground speed and direction of the zero-turn riding mower. The left lever controls the left rear drive wheel and the right lever controls the right rear drive wheel.

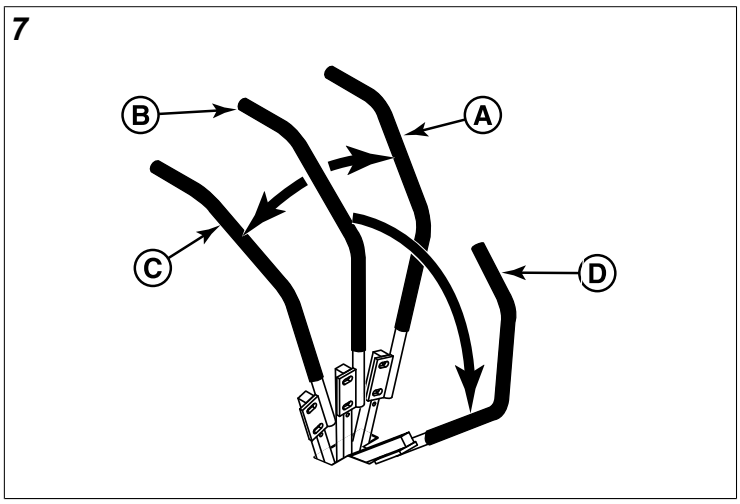

Forward	Neutral	Reverse

The parking brake must be disengaged before attempting to move the ground speed control levers from the NEUTRAL position.

Moving a lever forward (A) from the NEUTRAL position (B) increases the FORWARD speed of the associated wheel, and pulling back (C) on a lever increases the REVERSE speed.

Moving the levers outwards (D) from the NEUTRAL position locks the levers in the NEUTRAL LOCKOUT position.

Note: The further a lever is moved away from the neutral position the faster the drive wheel will turn.

See the *Zero-Turn Riding Mower Driving Practice* section for steering instructions.

Fuel Level Gauge: Displays the fuel level in the tank.

Parking Brake: Pull the parking brake lever up and back to engage the parking brake. Move the lever fully forward and down to disengage the parking brake.

Note: To start the unit the parking brake must be engaged.

Engaging the parking brake locks the ground speed control levers in the NEUTRAL position. The parking brake must be disengaged before moving the ground speed control levers out of the NEUTRAL position.

DISENGAGE: Releases the parking brake.	**ENGAGE:** Locks the parking brake.

Seat Controls

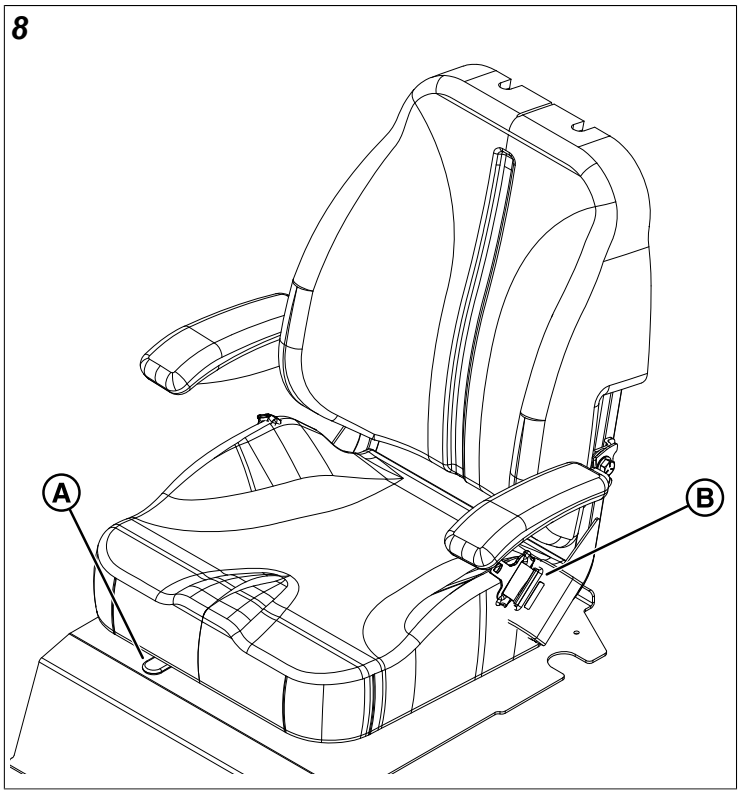

A. **Seat Adjustment Lever (Forwards/Backwards):** The seat can be adjusted forwards and backwards. Move the forwards/backwards seat adjustment lever, position the seat as desired, and release the lever to lock the seat in position.

B. **Retractable Seat Belt:** The seat belt is used to secure the operator to the seat.

Note: The seat belt should always be worn when the Roll Bar is in the raised and locked position. The seat belt should never be worn when the roll bar is in the down position.

Fuel Selector Valve: Turning the handle to the desired position determines which tank will be supplying fuel. With the handle pointing LEFT, it will draw fuel from the left-hand tank. With the handle pointing RIGHT, it will draw fuel from the right-hand fuel tank. With the handle pointing towards the operator, it will shut off fuel flow to the engine.

Fuel Tank Cap: To remove the cap, turn **counter-clockwise**.

Removable Floor Plate: The floor plate can be removed for easy access to the mower deck. To remove the plate, remove the retainer hardware and tilt the floor pan up and then remove from the unit. Reverse the process for re-installation.

Transmission Oil Fill: Transmission oil is added through the hydraulic oil tanks. It also serves as extra holding capacity for oil as the transmissions heat up and the hydraulic oil expands. See *Check / Fill Transmission Oil* for oil level check and fill procedures.

Transmission Release Levers:

Symbol	Control Name
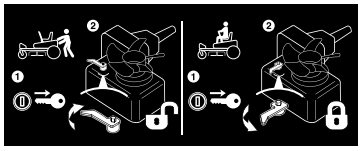	Transmission Release Levers

This unit is equipped with two transmission release levers. The transmission release levers deactivate the transaxle so that the unit can be pushed by hand. Both transmission release levers must be in the same position whether you are driving the unit or pushing it by hand. See *Pushing the Unit by Hand* for operational information.

Seat Latch: The seat latch (A, Figure 9) secures the seat plate to the frame of the unit

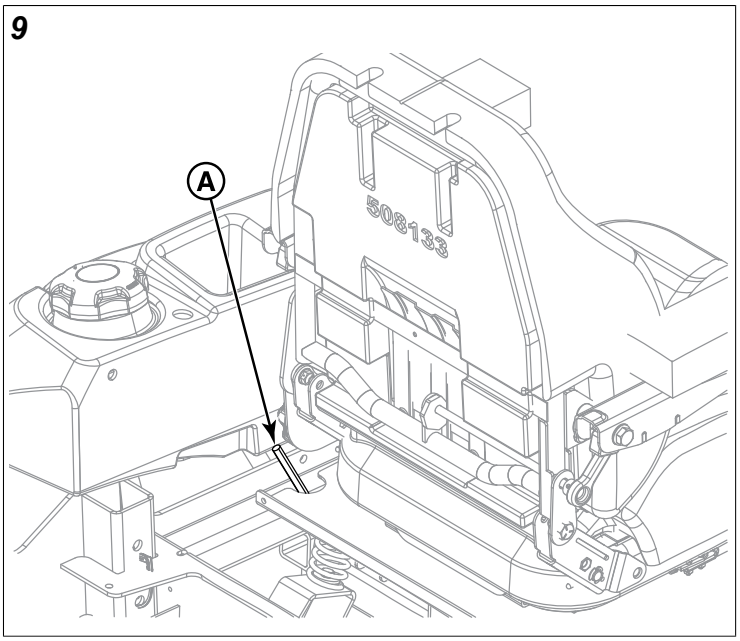

To raise the seat plate, release the latch by moving the seat latch towards the front of the unit and then raise the seat plate.

The seat latch is spring loaded. When the seat plate is lowered back into place the seat latch will lock the seat plate into place.

Instrument Control Panel - Units with Briggs & Stratton Fuel Injected Engines

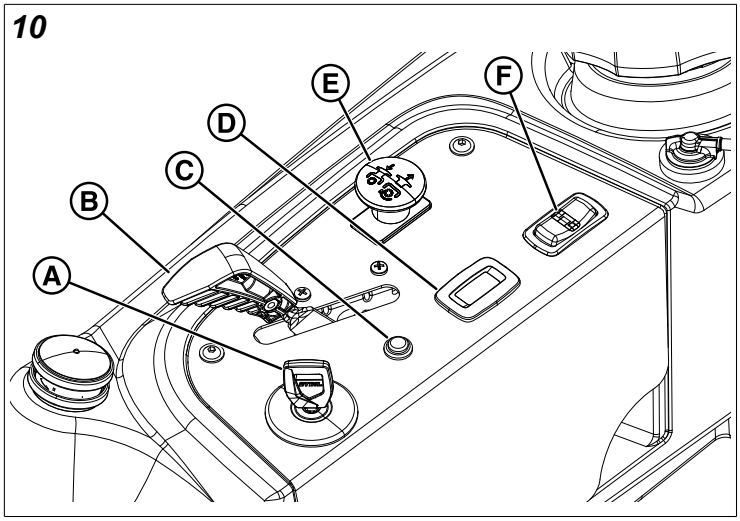

A. **Ignition Switch**
B. **Throttle Control**
C. **Malfunction Indicator Lamp (M.I.L.)**
D. **Hour Meter**
E. **PTO (Power Take Off) Switch**
F. **Headlight Switch**

Instrument Control Panel - Units with Kawasaki Fuel Injected Engines

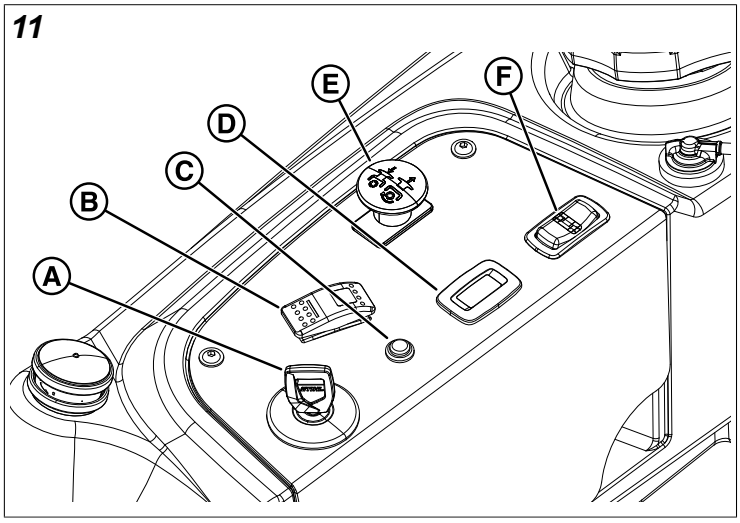

A. **Ignition Switch**
B. **Throttle Control Rocker Switch**
C. **Malfunction Indicator Lamp (M.I.L.)**
D. **Hour Meter**
E. **PTO (Power Take Off) Switch**
F. **Headlight Switch**

Instrument Control Panel - Units with Kawasaki Carbureted Engines

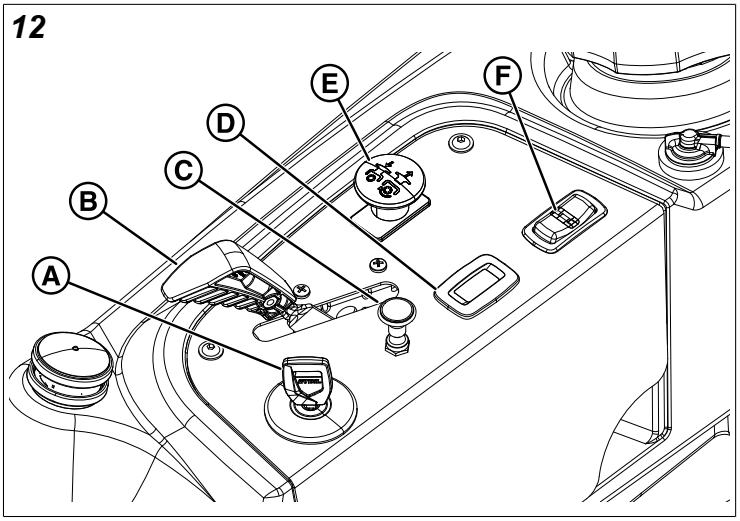

A. **Ignition Switch**
B. **Throttle Control**
C. **Choke**
D. **Hour Meter**
E. **PTO (Power Take Off) Switch**
F. **Headlight Switch**

Throttle Control: The throttle controls engine speed. Move the throttle forward to increase engine speed and back to decrease engine speed. Always operate at FULL throttle when mowing.

Fast throttle speed.	Slow throttle speed.

Choke: Close the choke for cold starting. Open the choke once the engine starts. A warm engine may not require choking. Pull the knob UP to close the choke. Push the knob DOWN to open the choke.

Ignition Switch: The ignition switch starts and stops the engine, it has three positions:

STOP		
OFF: Stops the engine and shuts off the electrical system.	**RUN:** Allows the engine to run and powers the electrical system.	**START:** Cranks the engine for starting.

Note: Never leave the ignition switch in the RUN position with the engine stopped—this drains the battery.

PTO (Power Take Off) Switch: The PTO switch engages and disengages the mower blades. Pull UP on the switch to engage, and push DOWN to disengage.

Hour Meter: This unit is equipped with a dual function hour meter that records the number of hours that the engine has run and the number of hours that the PTO switch has been engaged.

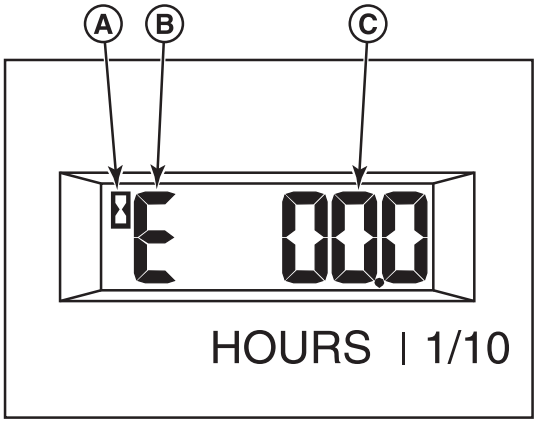

"A" - Hour Glass Icon - The hour glass icon flashes when the hour meter is recording the passage of time.

"B" - Mode Icon - The mode icon will display an "E" when displaying engine hours, and a "P" when displaying PTO hours.

"C" - Time Display - This is the number of hours that are recorded.

The default display of the hour meter is engine hours. The mode icon will display a "E" and the hour glass icon will not flash.

To begin recording engine hours, start the unit's engine and release the parking brake. The hour glass icon will flash.

To begin recording PTO hours, pull the PTO switch up to engage the PTO clutch. The unit's engine must be running. The mode icon will display a "P" and the hour glass icon will flash.

While recording PTO hours, the hour meter also records engine hours; however, the hour meter only displays PTO hours when recording PTO hours.

To stop recording PTO hours, push the PTO switch down to disengage the PTO clutch.

To stop recording engine hours, engage the parking brake.

The hour meter has a self contained power source so that the recorded hours are always visible even when the engine is OFF.

Head Light Switch: The headlight switch turns the head lights on and off.

Dual USB Charging Port: Open the top doors to access the two (2) USB charging ports. The USB port provides a total current of up to 3.15 amps and its center LED indicates when charging is in process. The ignition switch must be in the RUN position for charging.

Malfunction Indicator Lamp (M.I.L.): The malfunction indicator lamp detects problems with the engine. If the malfunction indicator lamp begins to flash while you are operating the unit, see the engine operator's manual.

Throttle Control Rocker Switch: Pressing the throttle control rocker switch forward will increase the throttle position. Pressing the throttle control rocker switch backwards will decrease the throttle position. Always operate at FULL throttle when mowing.

Fast throttle speed.	Slow throttle speed.

Operation

Before First Time Operation

- Be sure to read all information in the OPERATOR SAFETY and OPERATION sections before attempting to operate this unit.
- Become familiar with all of the controls and how to stop the unit.
- Drive in an open area without mowing to become accustomed to the unit.

WARNING

- Never operate on slopes greater than 15 degrees.
- Select slow ground speed before driving onto a slope. Use extra caution when operating on slopes with a rear-mounted grass catcher.
- Avoid turning down slopes; if possible turn up slopes. Use caution when changing direction on slopes and do NOT start or stop on a slope.

WARNING

- Never allow passengers to ride on the unit.
- Before leaving the operator’s position for any reason, engage the parking brake, disengage the PTO, stop the engine and remove the key.
- To reduce fire hazard, keep the engine and zero-turn riding mower free of grass, leaves, and excess grease. Do NOT stop or park unit over dry leaves, grass or combustible materials.
- Fuel is highly flammable and must be handled with care. Do NOT remove the fuel cap(s) or add fuel with the engine running or while hot. Do NOT allow open flame, smoking, or matches in the area. Avoid over-filling and wipe up any spills.

WARNING

Do NOT load this zero-turn riding mower on a trailer or truck using two separate ramps. Only use a single ramp that is at least one foot wider than the width of the rear wheels of this unit. This unit has a zero turning radius and the rear wheels could fall off the ramps, or the unit could tip over injuring the operator or bystanders.

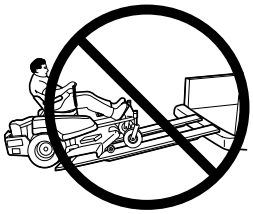

Checks Before Starting

- Check that the crankcase is filled to the full mark on the crankcase oil fill and dipstick. If necessary, add oil through the engine oil fill. See the engine operator’s manual for instructions, engine oil dipstick location, and oil recommendations.
- Make sure all nuts, bolts, screws, and pins are in place and tight.
- Adjust the seat position, and make certain you can reach all the controls from operator’s position.
- Fill the fuel tank with fresh fuel. Refer to the engine operator's manual for fuel recommendations.
- Check the hydraulic oil level.
- Make sure that the fuel selector valve in an "ON" position.

Starting the Engine - Fuel Injected Models

WARNING

- If you do not understand how a specific control functions, or have not yet thoroughly read the FEATURES AND CONTROLS section, do so now.
- Do NOT attempt to operate the unit without first becoming familiar with the location and function of all controls.

Note: To prime a dry fuel system, turn the key switch to the RUN position for one minute. Allow the fuel pump to cycle and prime the system. Turn the ignition switch to OFF.

1. While sitting in the operator's seat, engage the parking brake, make sure the PTO switch is disengaged, and the ground speed control levers are locked in the neutral position.
2. Position the throttle control midway between SLOW and FAST positions.
3. Insert the key into the ignition switch and turn it to the START position. Release the switch as soon as the engine starts. If the starter does not turn the engine over, turn the ignition switch to OFF immediately, and consult the engine operator's manual. *Warm up the engine by running it for at least a minute before engaging the PTO switch or driving the unit.*
4. After warming the engine always operate the unit at FULL throttle when mowing.

In the event of an emergency the engine can be stopped by simply turning the ignition switch to OFF. Use this method only in emergency situations. For normal engine shut down follow the procedure given in *Stopping the Zero-Turn Riding Mower*.

Starting the Engine - Fuel Injected Models with Throttle Control Rocker Switch

WARNING

- If you do not understand how a specific control functions, or have not yet thoroughly read the FEATURES AND CONTROLS section, do so now.
- Do NOT attempt to operate the unit without first becoming familiar with the location and function of all controls.

1. While sitting in the operator's seat, engage the parking brake, make sure the PTO switch is disengaged, and the ground speed control levers are locked in the neutral position.
2. Insert the key into the ignition switch and turn it to the START position.
3. The throttle will self-adjust to idle when starting. After the engine starts allow the engine to warm. *Warm up the engine by running it for at least a minute before engaging the PTO switch or driving the unit.*
4. After warming the engine always operate the unit at FULL throttle when mowing.

In the event of an emergency the engine can be stopped by simply turning the ignition switch to OFF. Use this method only in emergency situations. For normal engine shut down follow the procedure given in *Stopping the Zero-Turn Riding Mower*.

Starting the Engine - Carbureted Models

WARNING

- If you do not understand how a specific control functions, or have not yet thoroughly read the FEATURES AND CONTROLS section, do so now.
- Do NOT attempt to operate the unit without first becoming familiar with the location and function of all controls.

1. While sitting in the operator's seat, engage the parking brake, make sure the PTO switch is disengaged, and the ground speed control levers are locked in the neutral position.
2. **A warm engine may not require choking.** Set the engine throttle control to FAST throttle position. Then fully close the choke by pulling the knob OUT fully.
3. Insert the key into the ignition switch and turn it to the START position.
4. After the engine starts, gradually open the choke (push knob down fully). Reduce to half throttle speed and allow engine to warm. *Warm up the engine by running it for at least a minute before engaging the PTO switch or driving the unit.*
5. After warming the engine always operate the unit at FULL throttle when mowing.

In the event of an emergency the engine can be stopped by simply turning the ignition switch to OFF. Use this method only in emergency situations. For normal engine shut down follow the procedure given in *Stopping the Zero-Turn Riding Mower*.

Stopping the Zero-Turn Riding Mower

1. Drive the unit to a flat, level surface and return the ground speed control levers to the middle position to stop the unit's movement. Pivot the levers outward and lock them in NEUTRAL.
2. Disengage the PTO by pushing down on the PTO switch.
3. Engage the parking brake by pulling the handle up until it locks into position.
4. Move the throttle control to mid-throttle position and turn the ignition switch to OFF. Remove the key.

Zero-Turn Riding Mower Driving Practice

Before attempting to drive the zero-turn riding mower make sure you have read the FEATURES AND CONTROLS section and understand the location and function of all the unit's controls.

The ground speed control levers of the zero-turn riding mower are responsive and learning to gain a smooth and efficient control of the unit's forward, reverse, and turning movements will take some practice.

Before you begin mowing, spend some time going through the maneuvers shown in this manual and become familiar with how the unit accelerates, travels, and steers.

Locate a smooth, flat area of your lawn with plenty of room to maneuver. (Clear the area of objects, people and animals before you begin.) Operate the unit at mid-throttle during this practice session (ALWAYS operate at full throttle when mowing), and turn slowly to prevent tire slippage and damage to your lawn.

We suggest you begin with the *Smooth Travel* procedure, and then advance through the forward, reverse, and turning maneuvers.

You must release the parking brake prior to moving the control levers inward.

Smooth Travel

The ground speed control levers of the zero-turn riding mower are responsive.

The BEST method of handling the ground speed control levers is in three steps — as shown in Figure 13.

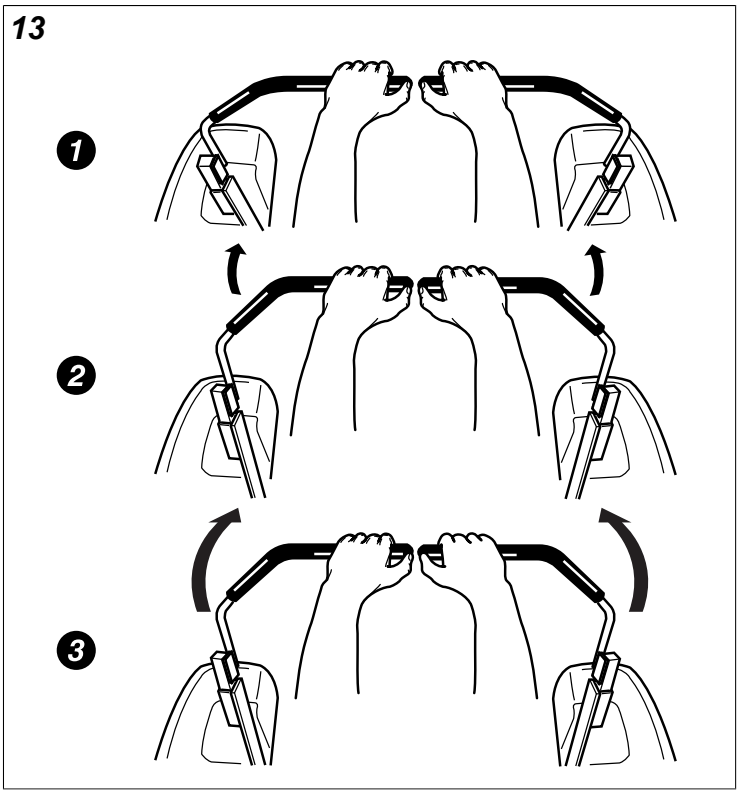

FIRST, place your hands onto the levers as shown.

SECOND, to go forward gradually push the levers forward with your palms.

THIRD, to speed up move the levers farther forward. To slow down smoothly, slowly move the levers toward neutral.

Basic Driving

Forward Travel Practice

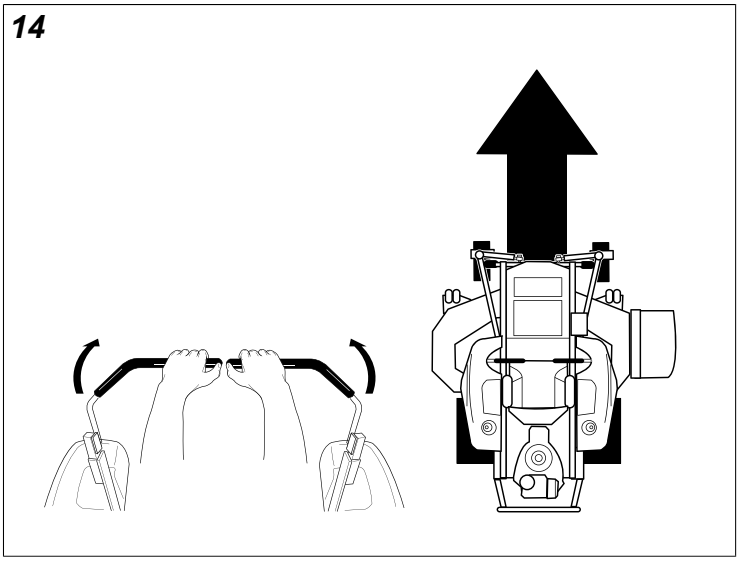

Gradually move both ground speed control levers — evenly FORWARD from neutral. Slow down and repeat.

Note: Straight forward travel takes practice. If necessary, top speed can be balance-adjusted — see the *Speed Balancing Adjustment* in the MAINTENANCE PROCEDURES section of this manual.

Reverse Travel Practice

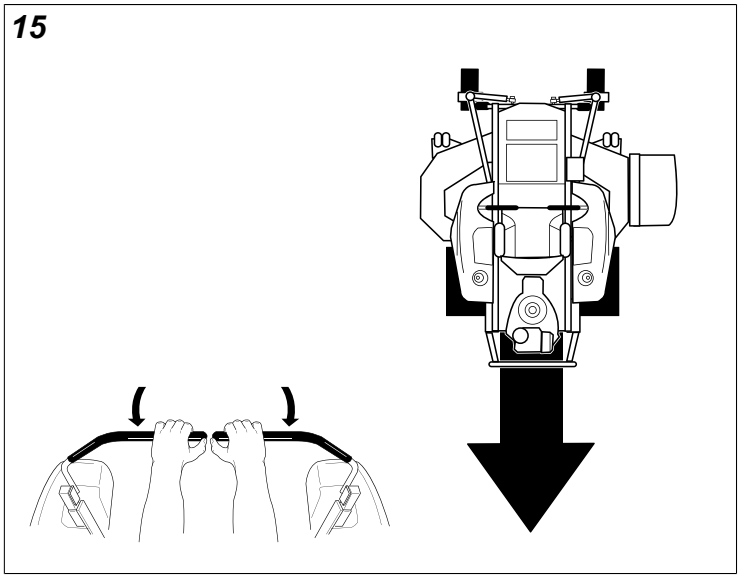

LOOK DOWN AND BEHIND, then gradually move both ground speed control levers evenly BACK from neutral. Slow down and repeat.

Note: Practice backing up for several minutes before attempting to do so near objects. The zero-turn riding mower turns sharply in reverse as well as forward, and backing up straight takes practice.

Practice Turning Around A Corner

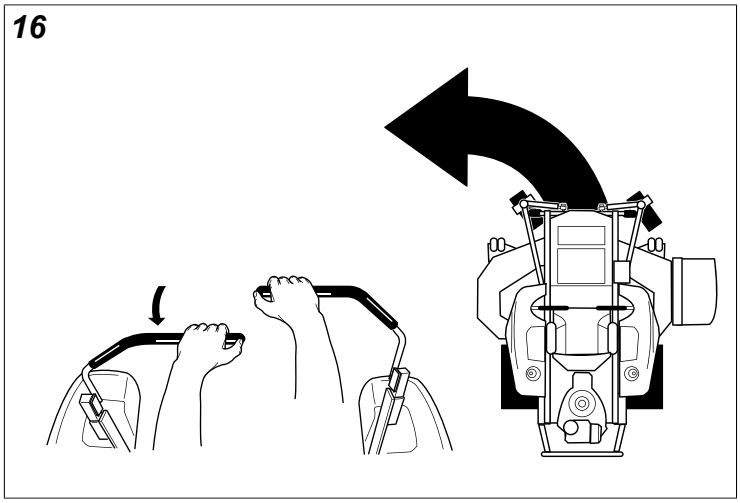

While traveling forward allow one ground speed control lever to gradually return back toward neutral. Repeat several times.

Note: To prevent pivoting directly on the tire tread, it is best to keep both wheels going at least slightly forward.

Practice Turning in Place

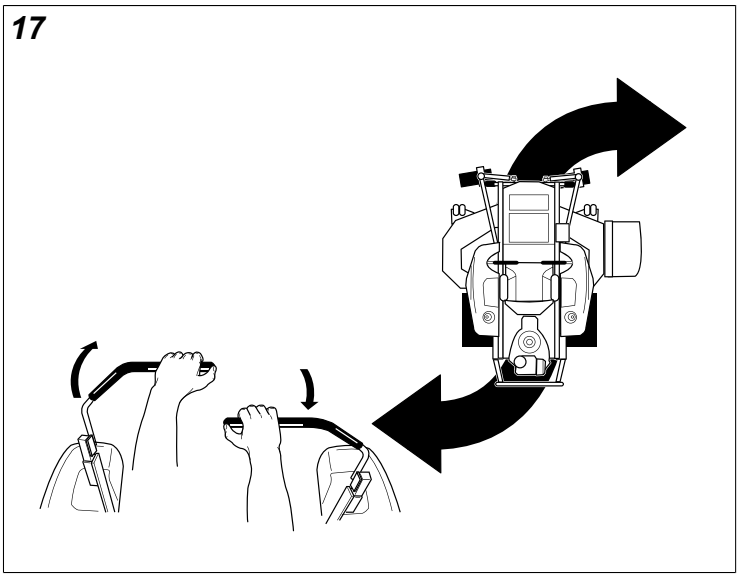

To turn in place, “zero-turn,” gradually move one ground speed control lever forward from neutral and the other lever back from neutral simultaneously. Repeat several times.

Note: Changing the amount each ground speed control lever is pulled—forward or back, changes the “pivot point” you turn on.

Advanced Driving

Executing an End-Of-Row Zero-Turn

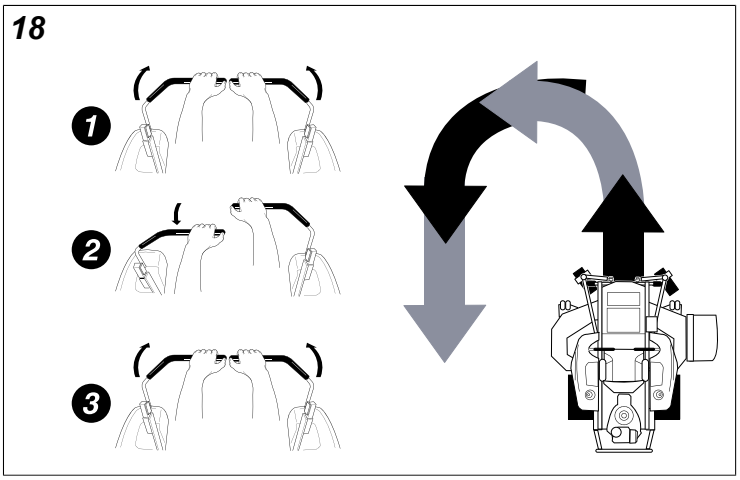

Your zero-turn riding mower's unique ability to turn in place allows you to turn around at the end of a cutting row rather than having to stop and Y-turn before starting a new row.

For example, to execute a left end-of row zero turn:

1. Slow down at the end of the row.
2. Move the RIGHT ground speed control lever forward slightly while moving the LEFT ground speed control lever back to center and then slightly back from center.
3. Begin mowing forward again.

This technique turns the unit LEFT and slightly overlaps the row just cut — eliminating the need to back up and re-cut missed grass.

Mowing

1. Engage the parking brake. Make sure that the PTO switch is disengaged, the ground speed control levers are locked in the NEUTRAL position and the operator is in the seat.
2. Start the engine. See *Starting the Engine*.
3. Set the mower cutting height. See *Cutting Height Adjustment*.
4. Set the throttle to the 1/2 throttle position.

Note: It is best practice to engage the PTO with the throttle set at the minimum throttle position necessary to engage the deck drive system without stalling the engine.

5. Engage the PTO by pulling up on the PTO switch.
6. Move the throttle to the "FAST" position and begin mowing.
7. When finished, reduce throttle speed so that the engine idles and push the PTO switch down to shut off the PTO.
8. Stop the engine. See *Stopping the Zero-Turn Riding Mower*.

Mowing Recommendations

Several factors can affect how well your unit cuts grass, Following proper mowing recommendations can improve the performance and life of your unit.

Height of Grass

Often cutting height is a matter of personal preference. Typically, you should mow the grass when it is between three and five inches high. The proper cutting height range for a specific lawn will depend upon several factors, including the type of grass, the amount of rainfall, the prevailing temperature, and the lawn’s overall condition.

Cutting the grass too short causes weak, thin grass plants, which are easily damaged by dry periods and pests. Cutting too short is often more damaging than allowing the grass to be slightly higher.

Letting grass grow a bit longer—especially when it is hot and dry—reduces heat build-up, preserves needed moisture and protects the grass from heat damage and other problems. However, allowing grass to grow too high can cause thin turf and additional problems.

Cutting off too much at one time shocks the plant’s growth system and weakens the grass plants. **A good rule of thumb is the 1/3 rule: to cut no more than one third of the grass height, and never more than 1 inch at a time.**

19

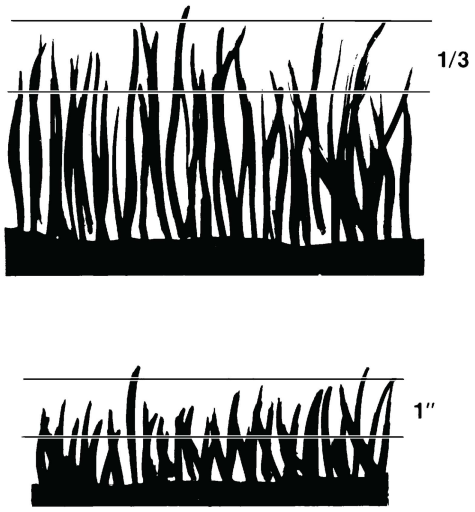

The amount of grass you are able to cut in one pass is also effected by the type of mowing system you are using (for example, broadcasting with side discharge decks can process a much larger volume of grass than mulching does).

Tall grass requires incremental cutting. For extremely tall grass, set the cutting height at maximum for the first pass (A, Figure 20), and then reset it to the desired height and mow a second (B) or third time.

Don't cover the grass surface with a heavy layer of clippings. Consider using a grass collection system and starting a compost pile.

20

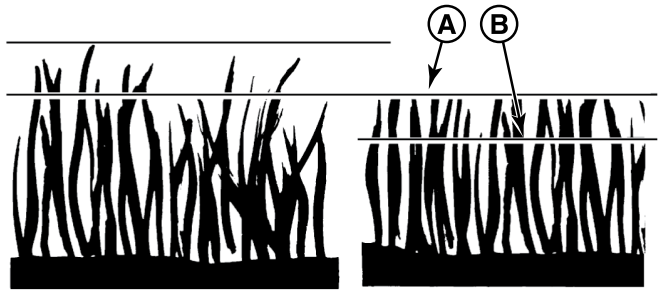

When and How Often to Mow

The time of day and condition of the grass greatly affect the results you'll get when mowing. For the best results, follow these guidelines:

- Mow when the grass is between three and five inches high.
- Mow with sharp blades. Short clippings of grass one inch or shorter decompose more quickly than longer blades. Sharp mower blades cut grass cleanly and efficiently, preventing frayed edges which harm the grass.
- Mow at time of day when the grass is cool and dry. Late afternoon or early evening often provide these ideal mowing conditions.
- Avoid mowing after rain or even heavy dew, and never mulch when the grass is wet (moist grass does not mulch well, and clumps beneath the mower deck).

Mowing Patterns

Always start mowing on a smooth, level area.

The size and type of area to be mowed will determine the best mowing pattern to use. Obstructions such as trees, fences and buildings, and conditions such as slopes and grades must also be considered.

- Cut long straight strips overlapping slightly.
- Where possible, change patterns occasionally to eliminate matting, graining or a corrugated appearance.
- For a truly professional cut, mow across the lawn in one direction, then re-cut the lawn by mowing perpendicular to the previous cut.

Note: Always operate the engine at FULL THROTTLE when mowing.

If you hear the engine slowing down, you are mowing too fast—using a slower ground speed will improve the cutting efficiency of the blades and prevents many common cutting problems. Use an appropriate ground speed for the thickness and height of the grass you are cutting (3rd gear or slower for manual gear models). If you hear the engine slowing down you are mowing too fast, use a slower ground speed.

21

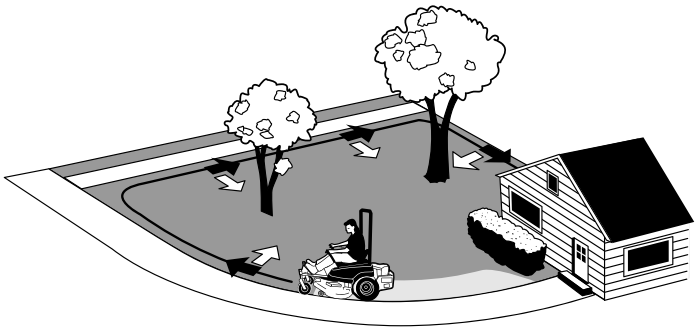

Where possible, make one or two passes around the outside of the area discharging the grass INTO the lawn to keep the cut grass off fences and walks.

22

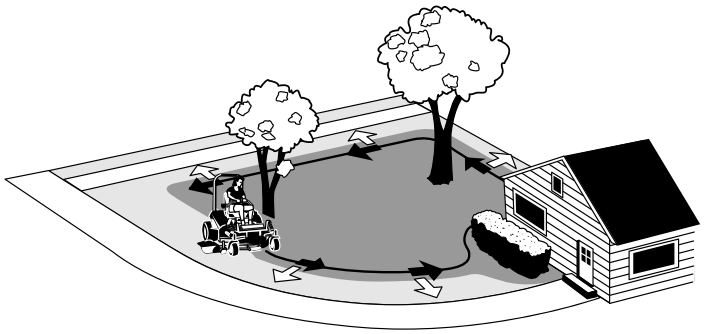

The remainder of the mowing should be done in the opposite direction so that the clippings are dispersed OUT onto the area of lawn previously cut.

Mowing Methods

Broadcast Mowing

Broadcasting, or side-discharging, disperses fine clippings evenly over the entire lawn. Many golf courses use this method. Your mower has a deep dish deck to allow freer circulation of clippings so they are broadcast evenly over the lawn.

Engine Speed & Ground Speed for Broadcasting:

Always operate the engine at full throttle when mowing. If you hear the engine slowing down, you are mowing too fast—using a slower ground speed will improve the cutting efficiency of the blades and prevents many common cutting problems.

ALWAYS use an appropriate ground speed for the thickness and height of the grass you are cutting (3rd gear or slower for manual gear models). If you hear the engine slowing down you are mowing too fast, use a slower ground speed.

How Much Grass to Cut Off When Broadcasting:

Mow when the grass is 3-5 inches long. Do not cut the grass shorter than 2 to 2-1/2 inches. Do not cut off more than 1 inch of grass in a single pass.

Mulching

Mulching consists of a mower deck which cuts and re-cuts clippings into tiny particles and which then blows them down INTO the lawn. These tiny particles decompose rapidly into by-products your lawn can use. UNDER PROPER CONDITIONS, your mulching mower will virtually eliminate noticeable clippings on the lawn surface.

Note: When mulching under heavy cutting conditions, a rumbling sound may be present and is normal.

Mulching Requires EXCELLENT Mowing Conditions:

Mulching mowers cannot function properly if the grass is wet, or if the grass is simply too high to cut. Even more than normal mowing, mulching requires that the grass be dry and the appropriate amount is cut.

Do not use the mower as a mulching mower during the first two or three mowings in the spring. The long grass blades, quick growth, and often wetter conditions are more suitable for broadcasting (side-discharging) or grass bagging operation.

Engine Speed & Ground Speed for Mulching:

Use full engine throttle matched with a slow ground speed so that clippings will be finely cut. Ground speed while mulching should be HALF of the speed that would be used when broadcasting (side discharging) under similar conditions. Since mulching requires more horsepower than broadcasting, using a slower ground speed is vitally important for proper mulching operation.

How Much Grass to Mulch:

The best mulching action typically results from cutting only the top 1/2 inch to 3/4 inch of grass blade. This provides short clippings which decompose properly (much more quickly than longer clippings). The ideal cutting height will vary with climate, time of year, and quality of your lawn. We recommend that you experiment with both the cutting height and ground speed until you achieve the best cut. Start with a high cutting height and using progressively lower settings until you find a cutting height that is matched to your mowing conditions and preferences.

Pushing the Unit By Hand

NOTICE

Do NOT tow zero-turn riding mower.

Towing the units will cause hydraulic transmission damage. Do not use another vehicle to push or pull this unit.

1. Disengage the PTO, engage the parking brake, turn the ignition switch to OFF, and remove the key.
2. Locate the transmission release lever on top of the transmission of the unit. There is one transmission release lever on each transmission. The transmission release levers open and close the transmission bypass valves.
3. To open the transmission bypass valves rotate the transmission release levers to the "bypass" position (A, Figure 23). The transmission release levers will contact the bodies of the transmissions. The transmission release levers will be oriented so that they are perpendicular to the axles of the transmissions.

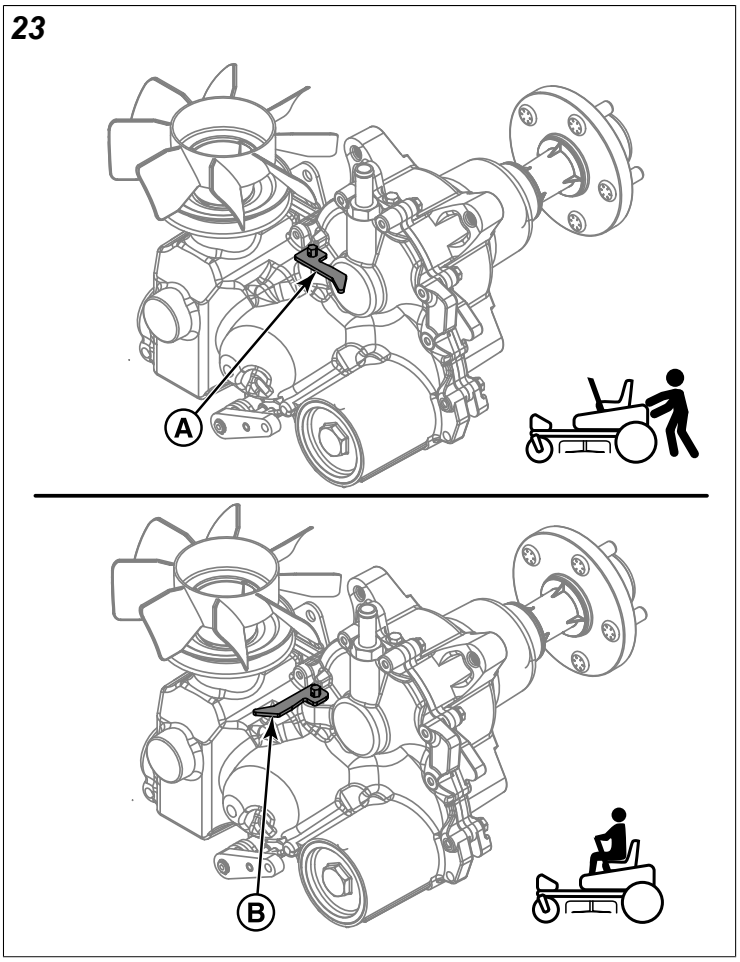

4. Disengage the parking brake. The unit can now be pushed by hand.
5. After moving the unit, close the bypass valves by rotating the transmission release levers to the "run" position (B). The transmission release levers will contact the bodies of the transmissions. The transmission release levers will be oriented so that they are parallel to the axles of the transmissions.

Note: Both transmission release levers must be in the same position.

Raise and Lower the Roll Bar

WARNING

Avoid serious injury or death from roll over:

- Keep roll bar in the raised and locked position and use the seat belt.
- There is no roll over protection when the roll bar is down.
- Lower the roll bar only when necessary and NEVER remove it.
- Do NOT use seat belt when the roll bar is down.
- Raise the roll bar as soon as clearance permits.
- Do NOT jump off if the mower tips.

To lower the roll bar:

1. Pull the hair pin clips (A, Figure 24) out of the retainer pins (B).

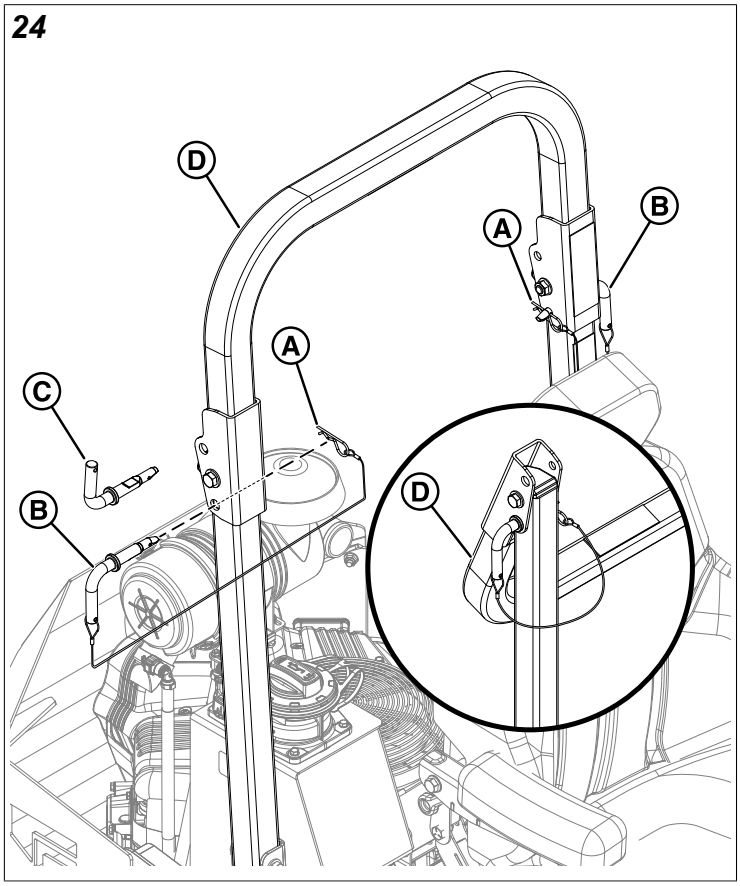

2. Rotate the retainer pins so that the handle of the pin is pointing up (C).
3. Remove the retainer pins. You may need to push or pull on the top loop (D) of the roll bar in order to pull the pins out of the roll bar.
4. Lower the roll bar.
5. With the handles of the retainer pins pointing up, install the retainer pins into the roll bar and secure the roll bar into the down position.
6. Rotate the retainer pins so that the handle of the pin is pointing down and then install the hair pin clips into the retainer pins.

To raise the roll bar:

1. Pull the hair pin clips (A, Figure 24) out of the retainer pins (B).
2. Rotate the retainer pins so that the handle of the pin is pointing up (C).
3. Remove the retainer pins.
4. Raise the top loop (D) of the roll bar into position.
5. With the handles of the retainer pins pointing up, install the retainer pins into the roll bar and secure the roll bar into the raised position.
6. Rotate the retainer pins so that the handle of the pin is pointing down and then install the hair pin clips into the retainer pins.

Attaching a Trailer

Secure the trailer with an appropriately sized clevis pin (A, Figure 25) and clip (B). See OPERATOR SAFETY for additional safety information regarding trailers and towing.

WARNING

Towing Hazard

Towed loads can be hazardous and cause loss of control on slopes.

- The maximum gross (trailer & load) weight of the trailer should not exceed 200 lbs (91 kg).
- The maximum tongue weight should not exceed 20 lbs (9,1 kg).
- Do not operate on slope exceeding 10 degrees.
- Reduce speed and use extreme caution on slopes.
- Do not tow with a grass bagger attached.

25

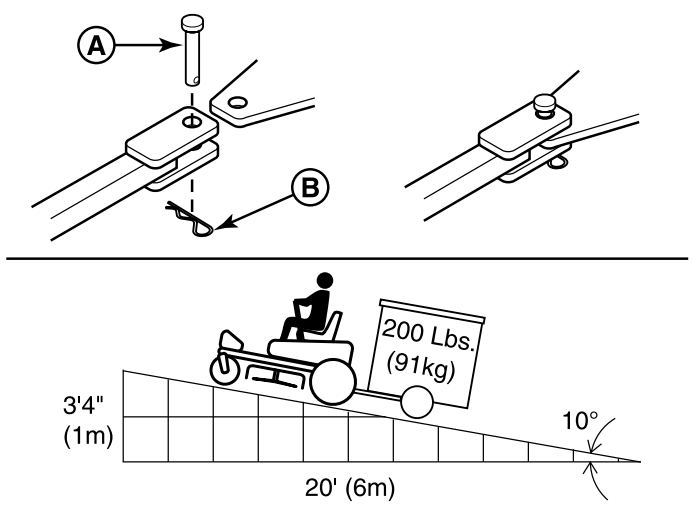

Excessive towed loads can cause loss of traction and loss of control on slopes. Reduce towed weight when operating on slopes. The surface being driven on greatly impacts traction and stability. Wet or slippery surfaces can greatly reduce traction and the ability to stop or turn. Carefully evaluate the surface conditions before operating the unit and trailer, and never operate on slopes greater than 10°.

Storage

Temporary Storage (30 Days or Less)

Remember, the fuel tank will still contain some fuel, so never store the unit indoors or in any other area where fuel vapor could travel to any ignition source. Fuel vapor is also toxic if inhaled, so never store the unit in any structure used for human or animal habitation.

WARNING

Never store the unit, with fuel in the engine or fuel tank, in a heated shelter or in an enclosed, poorly ventilated enclosures. Fuel fumes may reach an open flame, spark or pilot light (such as a furnace, water heater, clothes dryer, etc.) and cause an explosion.

Handle fuel carefully. It is highly flammable and careless use could result in serious fire damage to your person or property.

Drain fuel into an approved container outdoors away from open flame or sparks.

Here is a checklist of things to do when storing your unit temporarily or in between uses:

- Park the unit on a flat level surface. Disengage the PTO, engage the parking brake, turn the ignition switch to OFF, and remove the ignition key.
- Keep the unit in an area away from where children may come into contact with it. If there's any chance of unauthorized use, remove the spark plug(s) and put in a safe place. Be sure the spark plug openings are protected from foreign objects with a suitable cover.
- If the unit can't be stored on a reasonably level surface, chock the wheels.
- Clean all grass and dirt from the mower.

Long Term Storage (Longer Than 30 Days)

Before you store your unit for the off-season, read the *Fuel and Maintenance* instructions in the OPERATOR SAFETY section, then perform the following steps:

1. Drain crankcase oil while engine is hot and refill with a grade of oil that will be required when unit is used again.
2. Prepare the mower deck for storage as follows:
   A. Clean the underside of the mower deck.
   B. Coat all bare metal surfaces with paint or a light coat of oil to prevent rusting.
3. Clean external surfaces and engine.
4. Prepare the engine for storage. See the engine operator's manual.
5. Clean any dirt or grass from cylinder head cooling fins, engine housing, and air cleaner element.
6. Cover the air cleaner and exhaust outlet tightly with plastic or other waterproof material to keep out moisture, dirt, and insects.
7. Completely grease and oil unit as outlined in the *Lubrication* section.
8. Clean up the unit and apply paint or rust preventative to any areas where paint is chipped or damaged.
9. Make sure that the battery is fully charged. Battery life will be increased if it is removed, put in a cool, dry place and fully charged about once a month. If battery is left in unit, disconnect the negative cable.
10. Drain fuel system completely or add a fuel stabilizer to the fuel system. If you have chosen to use a fuel stabilizer

and have not drained the fuel system, follow all safety instructions and storage precautions in this manual to prevent the possibility of fire from the ignition of gasoline fumes. Remember, fuel fumes can travel to distant sources of ignition and ignite, causing risk of explosion and fire.

Note: Fuel, if permitted to stand unused for extended periods (30 days or more), may develop gummy deposits which can adversely affect the engine carburetor and cause engine malfunction. To avoid this condition, add a fuel stabilizer to the fuel tank and run the engine a few minutes, or drain all fuel from the unit before placing it in storage.

Starting After Long Term Storage

Before starting the unit after it has been stored for a long period of time, perform the following steps.

1. Remove any blocks from under the unit.
2. Install the battery if it was removed.
3. Unplug the exhaust outlet and air cleaner.
4. Fill the fuel tank with fresh fuel. See engine operator's manual for recommendations.
5. See engine operator's manual and follow all instructions for preparing engine after storage.
6. Check crankcase oil level and add proper oil if necessary. If any condensation has developed during storage, drain crankcase oil and refill.
7. Inflate tires to proper pressure. Check fluid levels.
8. Start the engine and let it run slowly. DO NOT run at high speed immediately after starting. Be sure to run engine only outdoors or in well ventilated area.

Maintenance Schedule

The following schedule should be followed for normal care of your unit. You will need to keep a record of your operating time. Determining operating time is easily accomplished by observing the hour meter.

If your unit is equipped with a dual function hour meter that displays both engine hours and PTO hours, the maintenance intervals are based on the engine hours as displayed by the hour meter.

For engine maintenance schedules and procedures, please refer to the engine operator's manual.

UNIT MAINTENANCE
Before Each Use
Check safety interlock system.
Check unit's brakes.
Check unit for loose hardware.
Check hydraulic oil level.
Every 25 Hours
Clean mower deck and check/replace mower blades.*
Lubricate unit.*
Check tire pressures.
Every 50 Hours
Lubricate front suspension control arms.
Every 100 Hours
Check mower blade stopping time.
Clean battery and cables.
Initial change of hydraulic oil.
Every 400 Hours or Yearly
Change hydraulic oil and filter.

*More often in hot (Over 85°F, 30°C) weather or dusty operating conditions.

ENGINE MAINTENANCE
Before Each Use
Check engine oil level.
Every 25 Hours
Check/Clean cooling fins and intake.*
Every 50 Hours
Check/Clean spark arrester.**
Refer to Engine Operator's Manual
Service air filter.
Change engine oil and filter.*
Check/Replace spark plugs.
Check/Replace fuel filter.

*More often in hot (Over 85°F, 30°C) weather or dusty operating conditions.
**If equipped, replace if damaged.

Maintenance Procedures

Service and Maintenance Safety

WARNING

Amputation and crushing hazard

Specific steps must be taken in order to perform service and maintenance procedures safely.

Read and follow all the applicable safety and instructional messages in this manual.

Always disengage the mower blades, set the parking brake, turn the engine OFF, remove the ignition key, and wait for all movement to stop prior to performing service and maintenance procedures.

Always disconnect the spark plug wire(s) and fasten it away from the plug before beginning any maintenance or service procedures in order to prevent accidental ignition.

Wear appropriate personal protective equipment such as safety shoes, safety glasses, gloves, and ear protection. Long hair, loose clothing or jewelry may get tangled in moving parts.

Use of parts that are not authorized or approved by STIHL may cause serious or fatal injury or property damage.

- STIHL recommends that only authorized STIHL replacement parts be used for repair or maintenance.

Before Maintaining Your Unit

Units Equipped with Electronic Fuel Injected Engines:

If electric welding on vehicle, remove battery negative cable (black) from battery negative (-) terminal, and disconnect the ECM electrical connector(s). If welding on the muffler, also disconnect the O2 sensor electrical connector and remove the O2 sensor from the muffler.

Checking/Adding Fuel

WARNING

Fuel and its vapors are extremely flammable and explosive.

Fire or explosion can cause severe burns or death.

When Adding Fuel

- Turn engine off and let engine cool at least 3 minutes before removing the fuel cap.
- Extinguish all cigarettes, cigars, pipes, and other sources of ignition.
- Fill fuel tank outdoors or in a well-ventilated area.
- Do not overfill fuel tank. To allow for expansion of the fuel, do not fill above the bottom of the fuel tank neck.
- Keep fuel away from sparks, open flames, pilot lights, heat, and other ignition sources.
- Check fuel lines, tank, cap, and fittings frequently for cracks or leaks. Replace if necessary.
- If fuel spills, wait until it evaporates before starting engine.

To add fuel:

1. Remove the fuel cap (A, Figure 26).

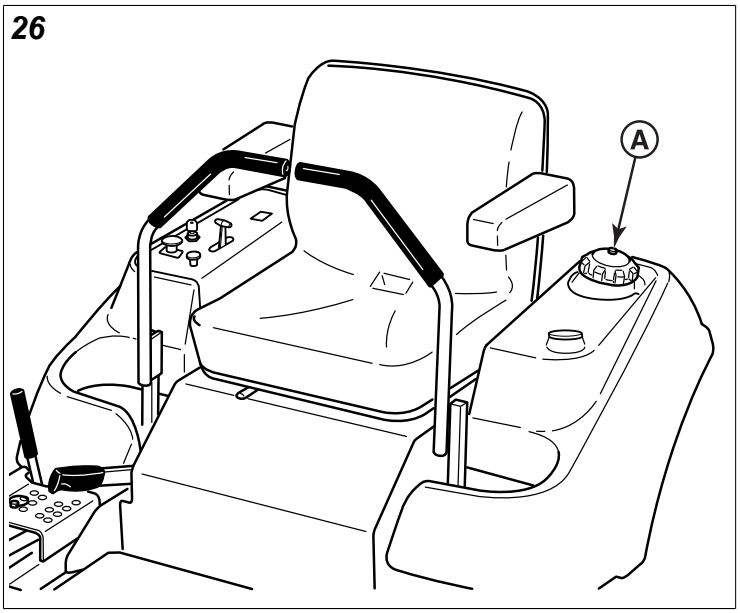

2. Fill the fuel tank to the bottom of the filler neck. This will allow for fuel expansion.
3. Install and hand tighten the fuel cap.
4. If your unit is equipped with two fuel tanks, repeat this process to fill the other fuel tank.

NOTICE

Refer to your engine operator's manual for specific fuel recommendations.

Replacing the Fuel Filter

WARNING

Fuel and its vapors are extremely flammable and explosive.

Fire or explosion can cause severe burns or death.

Do NOT remove the fuel filter when the engine is hot, as spilled gasoline may ignite. Do NOT spread hose clamps further than necessary. Ensure clamps grip hoses firmly over filter after installation.

Carbureated Models: The fuel filter is located in the fuel line between fuel tank and carburetor, near the fuel pump.

Fuel Injected Models: The fuel filter is located in the fuel line between the fuel tank and fuel pump.

If filter is dirty or clogged, replace as follows:

1. Disconnect the negative battery cable.
2. Place a container below the filter to catch spilled fuel.
3. Using a pliers, open and slide hose clamps from fuel filter.
4. Remove hoses from filter.
5. Install new filter in proper flow direction in fuel line.
6. Secure with hose clamps.
7. Reconnect the negative battery cable when finished.

Check Engine Oil Level

Interval: Before Each Use

Refer to the engine operator's manual for dipstick and oil fill locations and specific engine oil check and fill procedures.

Briggs & Stratton Vanguard Engines with Remote Oil Tank (Select Models)

Some models in this series of mower feature a remote oil tank (A, Figure 27) that supplies oil to the engine. Units equipped with a Vanguard engine with remote oil tank are factory filled with specially formulated Vanguard 15W-50 synthetic oil.

Note: This specific grade of oil is not required to keep engine warranty in effect.

For more information regarding this engine and other operational and maintenance information, please refer to the engine operator's manual included with your unit.

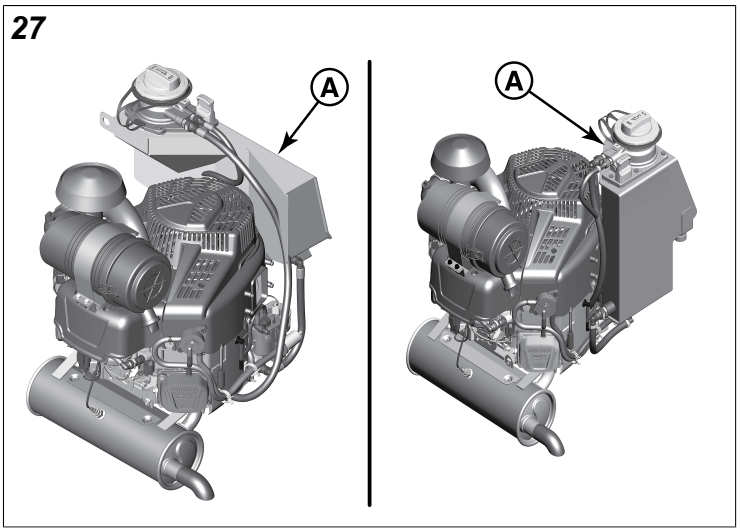

Changing the Engine Oil and Filter (Engines with Remote Oil Tank)

Engine Oil Type: 15W-50 synthetic oil. (See the engine operator's manual for other oil recommendations.)

Engine Oil Change Amount: 5 qt (4,73 L).

Oil Change Interval: Every 500 hours.

Important: Always make sure that the unit is parked on a flat, level surface when checking the engine oil level.

1. Park the unit on a flat, level surface. Engage the parking brake and disengage the PTO. Allow the engine to run until it is warm. This will warm the oil so it will drain better. Turn the ignition switch to OFF, remove the ignition key, and wait for all moving parts to stop before leaving the operator's position.
2. Clean the area around the engine oil dipstick (A, Figure 28) and oil fill cover (B) to remove any debris.

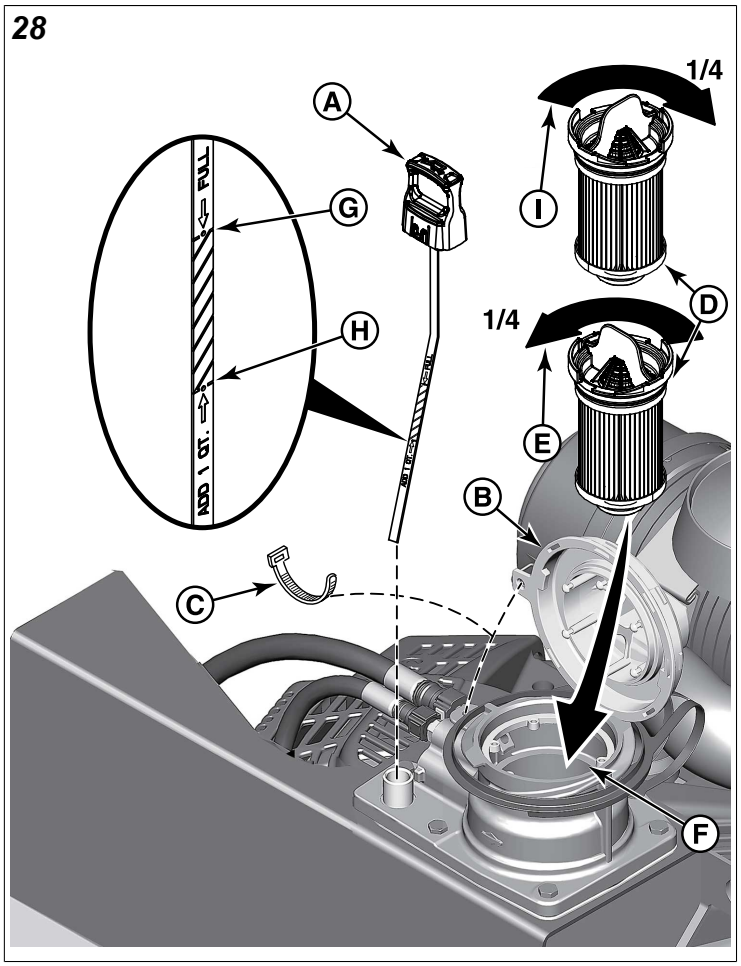

3. Remove the engine oil dipstick and wipe with a clean cloth.
4. Cut the self-locking tie (C) that keeps the oil fill cover securely closed. Open the oil fill cover.
5. Have a suitable container ready to capture dripping oil from the engine oil filter (D) after it is removed. Remove the oil filter by turning it **counter-clockwise** a 1/4 turn (E) and then pulling up. Dispose of the used oil filter properly.
6. This unit is equipped with an oil drain valve (A, Figure 29) that is used to drain the oil from the remote oil tank. The drain is located on the left side of the engine at the rear of the unit. The drain is routed through the unit's engine deck. To catch the drained engine oil, place a suitable container underneath the unit's engine deck.

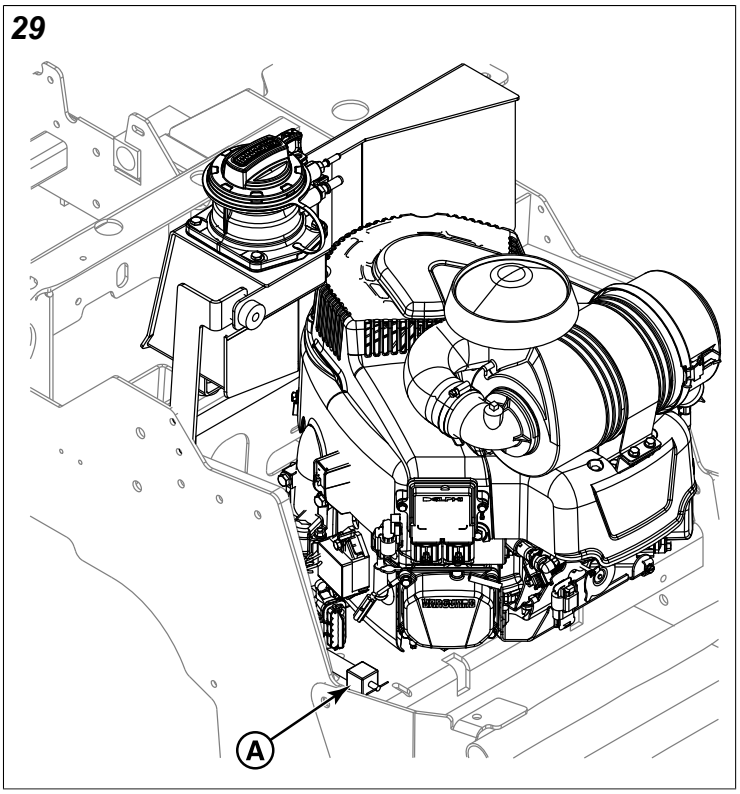

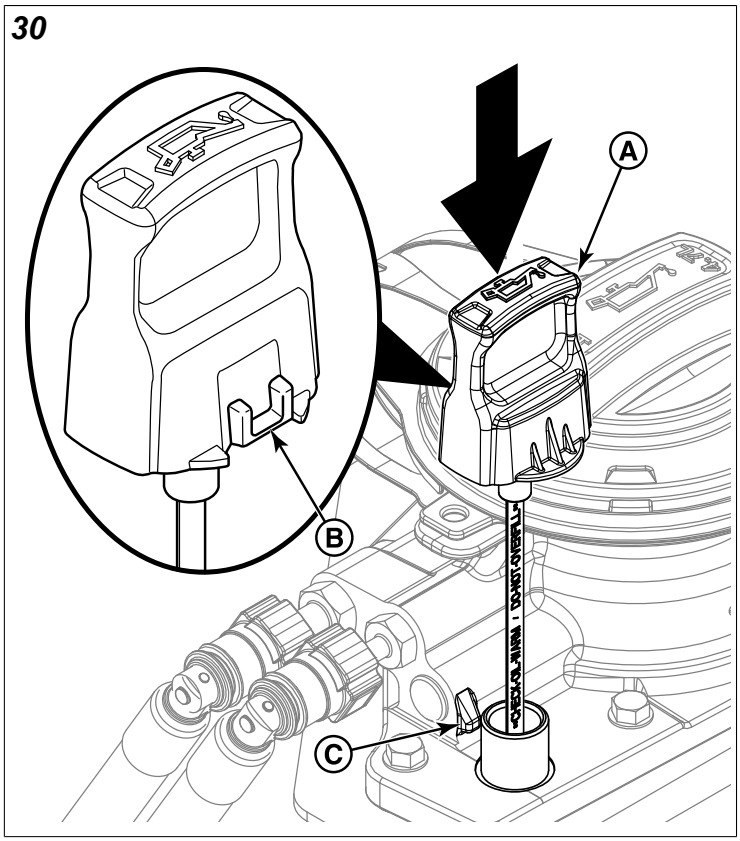

7. Remove the cap from the drain spout of the oil drain valve.
8. To operate the oil drain valve, turn **counter-clockwise** to open and drain the engine oil into a suitable container.
9. After the engine oil has drained, turn the oil drain valve **clockwise** to close and install the cap on the oil drain valve.
10. Pour oil into the engine oil fill (F, Figure 28). The remote oil tank is designed to hold 5 qt (4,73 L) of engine oil.
11. Install the engine oil dipstick (A, Figure 30) into the tank by pressing down firmly with your hand. The engine oil dipstick has a detent (B) and it must snap into place on the lip (C) of the tank housing so that the dipstick is fully installed into the tank. This action requires moderate force.
12. Remove the engine oil dipstick and check the oil level. Maximum oil level is the "FULL" line (G, Figure 28) on the dipstick. If the oil level is at or below the "ADD 1 QT." line (H), add more oil.
13. Install the dipstick.
14. Install a new engine oil filter by lowering it into the engine oil fill and then turning **clockwise** a 1/4 turn (I).
15. Close the oil fill cover.
16. Start and run the engine. As the engine warms up, check for oil leaks.
17. Stop the engine and check oil level. Add more if necessary.
18. If desired, a new self-locking tie can be installed to keep the oil fill cover securely closed.

Changing the Engine Oil and Filter (Models with Kawasaki Engines)

This series of mower has different engine options: Kawasaki FX Series (A, Figure 31) and Kawasaki FT Series (B). Please reference figure 31 as the location of the components listed for this procedure may vary by specific engine option.

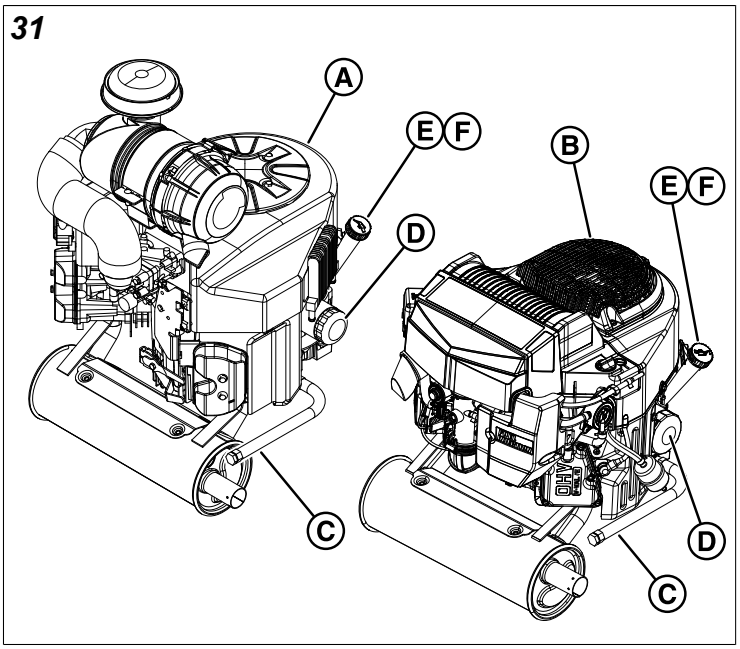

1. Warm engine by running for a few minutes. (Refer to the engine operator's manual for oil & filter replacement instructions.)
2. Remove the oil drain hose (C) from its storage position and route the hose so that when the oil drain cap is removed the oil can be drained into a small pan.
3. Place a small pan under the oil drain hose to catch the oil. Using the appropriate tools, remove the oil drain cap from the oil drain hose and drain the engine oil.
4. After draining, replace the cap and wipe up any spilled oil. Reinstall the oil drain hose to its storage position so it is retained during normal operation.
5. Place an absorbent shop cloth under the engine oil filter (D). Remove the engine oil filter and replace with a new one.
6. Add engine oil (refer to engine operator's manual) in the fill tube (E) and check the amount of oil in the engine using the engine oil dipstick (F).
7. Remove the shop cloth and wipe up any spilled oil.

Clean the Engine Compartment with Air and Water

Pressurized air and/or water can cause debris and/or hot water to be blown out. This action could result in personal injury.

When cleaning with air and/or water wear protective clothing, protective shoes, and eye protection. Eye protection includes goggles or a protective face shield.

The maximum air pressure for cleaning purposes must be below 205 kPa (30 psi). The maximum water pressure for cleaning purposes must be below 275 kPa (40 psi).

Engine Maintenance

For engine maintenance schedules and procedures, please refer to the engine operator's manual.

Containing Spilled Fluids and Proper Disposal of Waste

Make sure that fluids are contained when performing inspection, maintenance, testing, adjustment, and repair of the unit. Be prepared to collect the fluid with suitable leakproof containers before opening or disassembling any component containing fluids. Do not pour waste onto the ground, down a drain, or into any source of water.

Improper disposal of waste can threaten the environment. Dispose of all fluids according to local regulations and mandates.

Electronic Fuel Injection (EFI) System - EFI Models

EFI is an electronically-controlled fuel management system which is monitored by an Electronic Control Unit (ECU). A Malfunction Indicator Lamp (M.I.L.) will illuminate if problems or faults are detected. Servicing by an authorized dealer is necessary.

CAUTION

Do not disconnect or reconnect ECU wiring harness connector or any individual components with the ignition switch in the "ON" position. This can send a damaging voltage spike through the ECU.

Unplug harness from ECU before performing any welding on equipment.

Servicing the Exhaust System

Inspect the muffler for cracks, corrosion, or other damage. Remove the spark arrester, if equipped, and inspect for damage or carbon blockage. If replacement parts are required, make sure to use only original equipment replacement parts.

WARNING

Replacement parts must be of the same design and installed in the same position as the original parts. Other parts could result in damage or an injury.

Replacing the Spark Arrester:

CAUTION

Wait until the muffler is cool before working around or near the muffler.

1. Loosen the set screw (A, Figure 32) on the retaining ring (B) and slide off over the tip of the tailpipe extension (C).

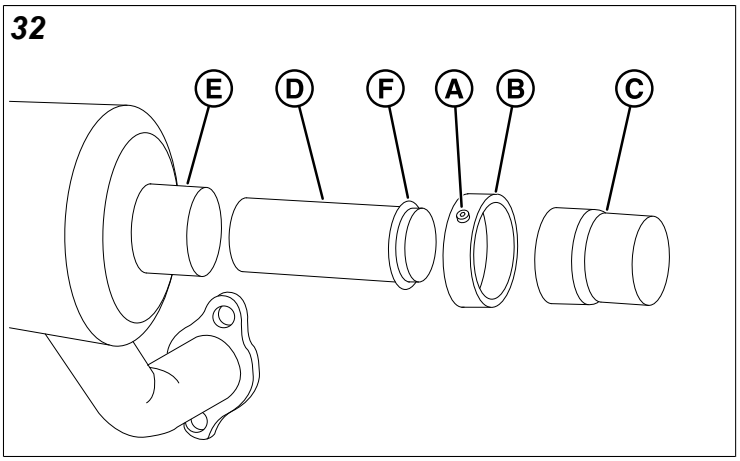

2. Remove the tailpipe extension. You may need to use pliers to remove the tailpipe extension if it is stuck due to corrosion.
3. Slide the screen (D) out of the tailpipe (E) and shake the screen to remove the built up soot and carbon. The amount of carbon collected will vary depending on the fuel used, air quality, engine age, and condition. (A soft non-metallic brush may be required to fully clean the screen).
4. Carefully inspect the screen for any tears, rips or any other damage which will prevent the screen from operating properly. Replace screen if damaged.
5. Slide the screen into the tailpipe of the muffler until the retaining lip (F) is sitting against the tip of the tailpipe.
6. Slide the tailpipe extension over the tailpipe of the muffler. The extension is designed to fit tightly and you may need to twist it to get it to slide on.
7. Slide the retaining ring over the tailpipe extension until it circles the expanded section of the extension where the muffler tailpipe and tailpipe extension overlap. Torque set screw to 38 in-lbs (4,3 Nm).

Fuse Identification and Location

The electrical system for this unit is equipped with replaceable fuse(s) that are installed into two (2) individual fuse holders that hold four (4) fuses each. See the chart below for the circuit, amperage, and approximate location of the fuses.

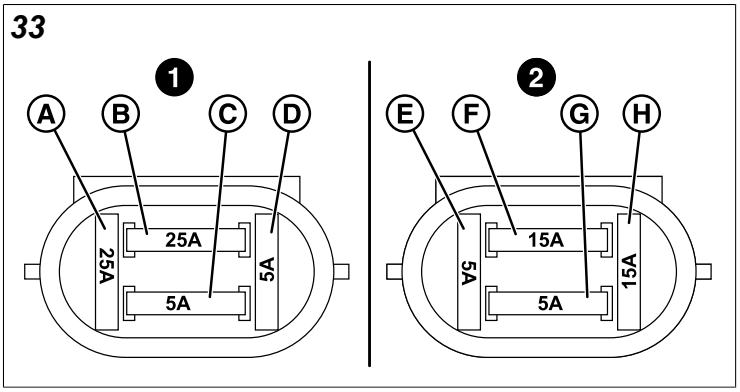

	Circuit	Amperage	Approximate Location
A	Spare	25 amp	Fuse Holder #1 - Located on the frame rail to the left side of the battery towards the front of unit.
B	Main	25 amp	
C	USB Charging Port	5 amp	
D	Spare	5 amp	
E	Spare	5 amp	Fuse Holder #2 - Located on the frame rail on the left side of the battery towards the back of the unit.
F	PTO Clutch	15 amp	
G	Headlights	5 amp	
H	Spare	15 amp	

Check / Fill Transmission Oil Level

This unit is equipped with two transmission oil tanks. One transmission oil tank only supplies oil to one transmission. The level of oil in both transmission tanks must be checked, and if necessary, filled.

Oil Type: SAE 20W-50 motor oil

1. Locate the transmission oil tanks (B, Figure 34) by raising the seat plate of the unit.
2. Check the oil level when the unit is cold. The oil should be up to the "FULL COLD" mark (A) on the transmission oil tanks (B). If the oil is below this level, proceed to step #3.

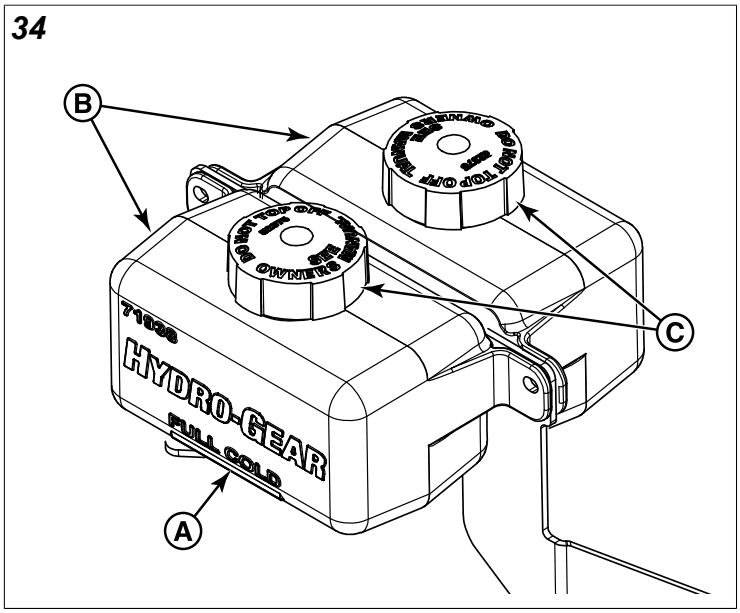

3. Before removing the tank cap (C), make sure that the area around the tank cap and fill neck of the tank is free of dust, dirt, and other debris. Remove the tank caps.
4. Add oil up to the "FULL COLD" mark.
5. Re-install the tank cap.
6. After adding oil to the tanks, it may be necessary to purge air from the hydraulic system. If the unit is not driving properly perform the *Purging the Air from the Hydraulic System* procedure.

Transmission Oil Filter Change

Change Interval: Every 400 Hours or Yearly (Initial hydraulic oil and filter change after first 100 hours of operation).

Filter Part Number: WB04-640-1300-A

Note: Removing the oil filter from the transaxle will drain the oil tank. Have a suitable container ready to catch any spilled oil. It is recommended that this procedure be performed by an authorized STIHL servicing dealer only.

1. Locate the hydraulic oil filter on the side of the transaxle.
2. Remove the oil filter cover (A, Figure 35) from the transaxle to drain the oil. Remove the O-ring (B) from the cover and discard the O-ring.

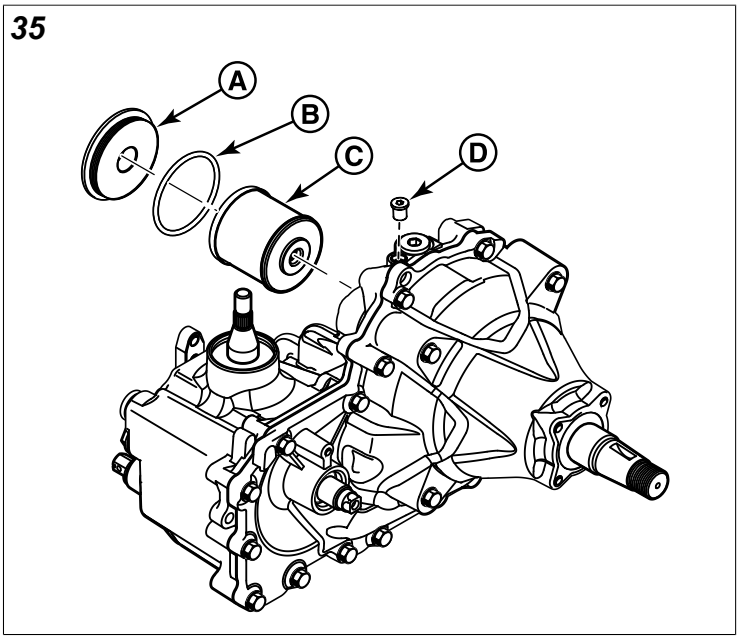

3. After the oil has drained from the transaxle, remove the oil filter (C) from the transaxle housing.
4. Install a new filter and a new O-ring onto the filter cover and install the filter cover. Torque the filter cover to 480-580 in-lbs (54.2 - 65.5 Nm).
5. Remove the top oil fill vent port (D) and fill the transaxle with new 20W50 motor oil through the expansion tank until the oil reaches the oil fill vent port.
6. Install the top oil fill vent port plug and continue filling the system with oil until the fill line is reached in the expansion tank.
7. Repeat this process for the other side of the machine.
8. Perform the *Purging the Air from the Hydraulic System* procedure.

Purging the Air from the Hydraulic System

Due to the effects air has on efficiency in hydraulic drive systems, it is critical that it be purged from the system.

These purge procedures should be implemented any time a hydraulic system has been opened to facilitate maintenance or any additional oil has been added to the system.

The resulting symptoms of air in the hydraulic system may be:

- Noisy operation.
- Lack of power or drive after short term operation.
- High operation temperature and excessive expansion of oil.

Before starting, make sure the transaxles/transmissions are at the proper oil levels. If it is not, fill to the specifications outlined in the *Check / Fill Transmission Oil Level* procedure.

Purging Air from the Hydraulic System:

1. Chock the front wheels to prevent the unit from rolling. Raise the rear of the unit so that the unit's rear tires do not contact the ground. Position jack stands under the rear bumper of the unit to secure it.
2. Open the transaxle's bypass valves (see *Pushing the Unit by Hand* for the location and function of the bypass valves), start the engine, release the parking brake, and slowly move the unit's ground speed control levers in both forward and reverse directions (5 to 6 times), as air is purged from the unit, the oil level will drop.
3. Stop the engine and engage the parking brake.
4. Close the transaxle's bypass valves, start the engine, release the parking brake, and slowly move the unit's ground speed control levers in both forward and reverse directions (5 to 6 times), as air is purged from the unit, the oil level will drop.
5. Stop the engine. Remove the jack stands from underneath the unit.
6. Repeat the process detailed above but with the unit's drive wheels on the ground. The procedure should be performed in an area free of any objects or bystanders.

It may be necessary to repeat the process detailed above until all the air is completely purged from the system. When the transaxles/transmissions operate at normal noise levels and move smoothly forward and reverse at normal speeds, then the transaxles/transmissions are considered purged.

Checking Tire Pressures

Tire pressure should be checked periodically, and maintained at the levels shown in the Specifications chart. Note that these pressures may differ slightly from the "Max Inflation" stamped on the side-wall of the tires. The pressures shown provide proper traction and extend tire life.

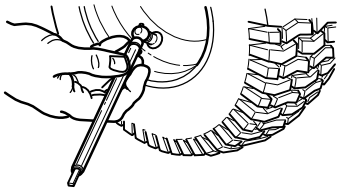

Lubrication

Lubricate the unit at the location shown in the following figures as well as the lubrication points listed below.

Grease:

- mower deck spindles (A, Figure 36).

- deck lift pivot blocks (A, Figure 37).
- transmission cradle pivot points (A, Figure 38).
- front caster wheel axles & yokes (See *Lubricating the Front Casters*).

Use grease fittings when present. Disassemble parts to apply grease to moving parts when grease fittings are not installed.

Not all greases are compatible. Your product is manufactured using Heavy Duty Lithium Complex EP, NLGI grade 2 grease. Using non-compatible grease could damage or cause premature parts failures.

Oil:

- deck puller bar pivot points (B, Figure 36)
- discharge chute hinge (C, Figure 36)
- deck lift pivots (B, Figure 37)
- seat plate pivots (B, Figure 38)
- control handle pivots (A, Figure 39)

Generally, all moving metal parts should be oiled where contact is made with other parts. Keep oil and grease off belts and pulleys. Remember to wipe fittings and surfaces clean both before and after lubrication.

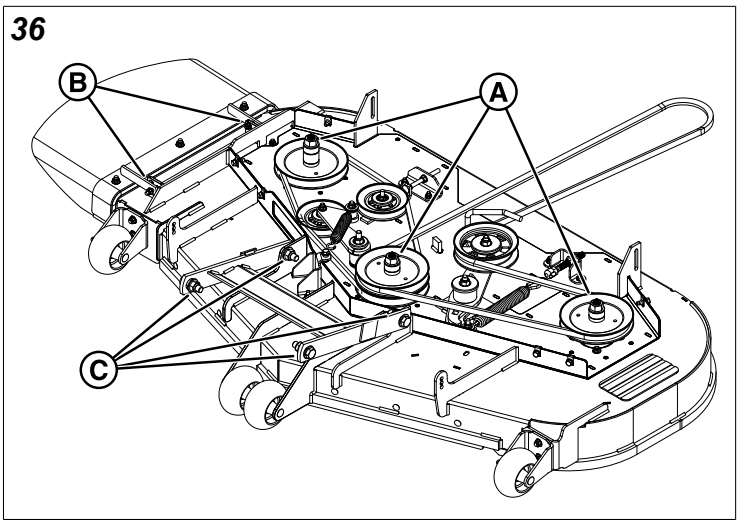

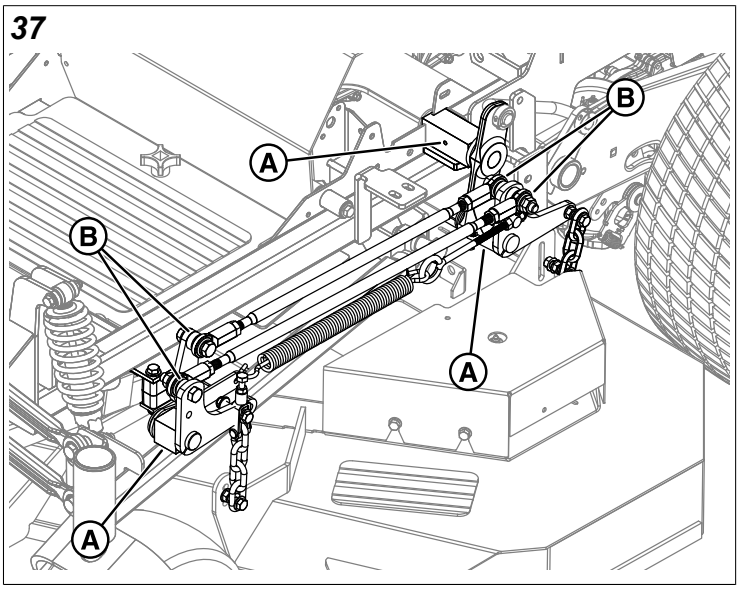

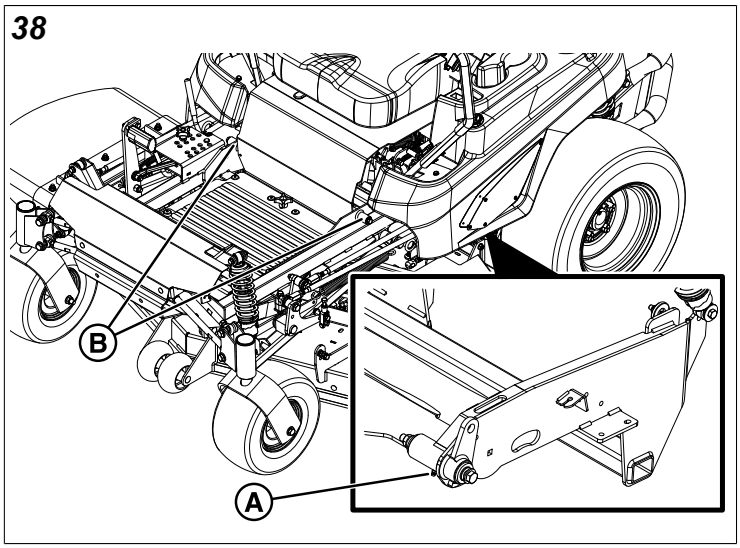

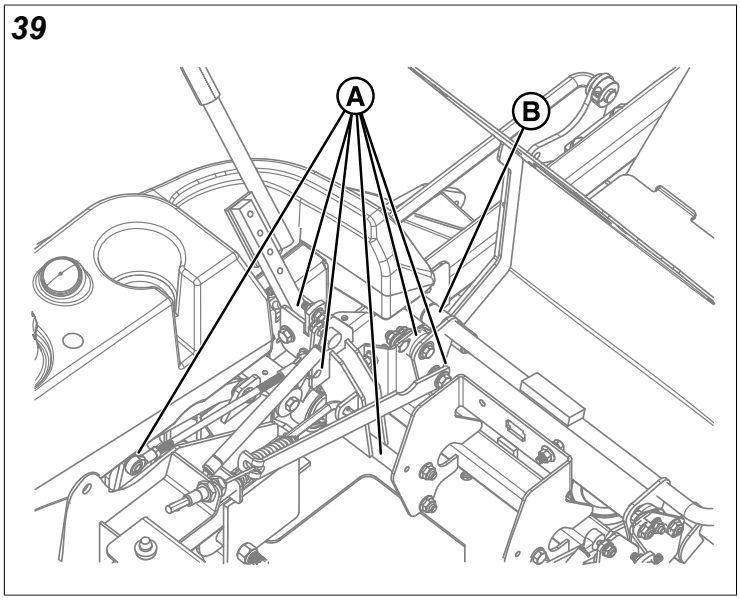

Lubricating the Front Suspension Arms

Interval: Every 50 hours.

Lubricate the ends of the four (4) front suspension control arms with a petroleum based chain lube at the areas identified as "A" in Figure 40.

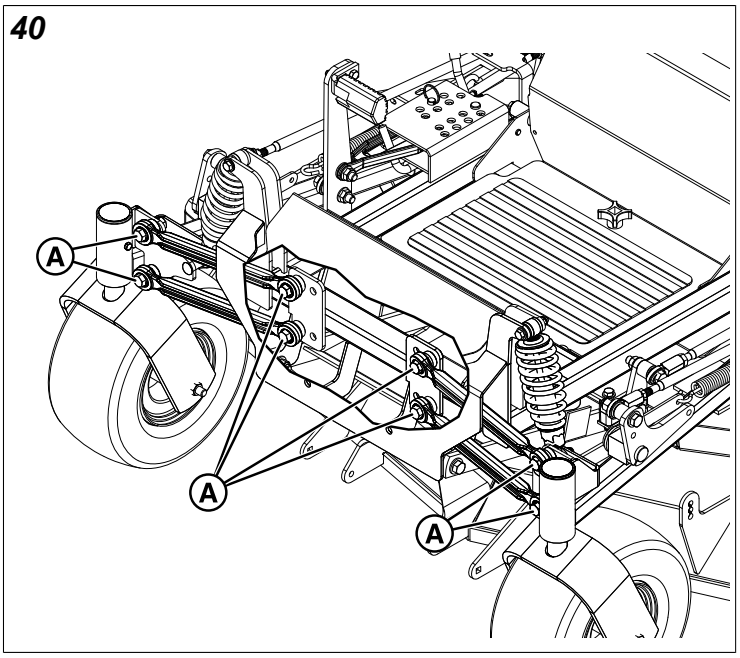

Lubricating the Front Casters

Interval: Front caster wheel axles (A, Figure 41) - Every 25 hours.

Interval: Front caster yoke axles - Yearly.

1. Remove the 1/4-28 bolt (B, Figure 41) screwed into the caster and install a 1/4-28 grease fitting.

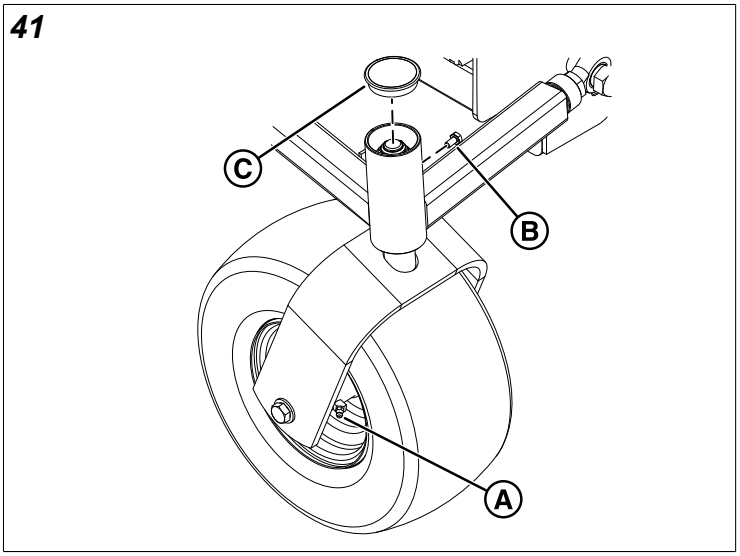

2. Carefully remove the upper cap (C) from the front caster tube using a thin flathead screwdriver or a thin plastic trim/clip removal tool.
3. Grease the front caster until the grease penetrates through the upper bearing to the top of the caster axle shaft. Verify that the added grease has not displaced the lower seal from the caster tube. If the seal is disturbed position it back into place.
4. Remove the 1/4-28 grease fitting and reinstall the 1/4-28 bolt.
5. Install the upper cap into the front caster tube.
6. Repeat the process for the other side of the unit.

Servicing the Mower Blades

Removing the Mower Blades

CAUTION

Laceration hazard

Mower blades are sharp.

Always wear gloves when handling, or working near, mower blades.

1. Use a block of wood to prevent the mower blade from turning as shown in Figure 42.

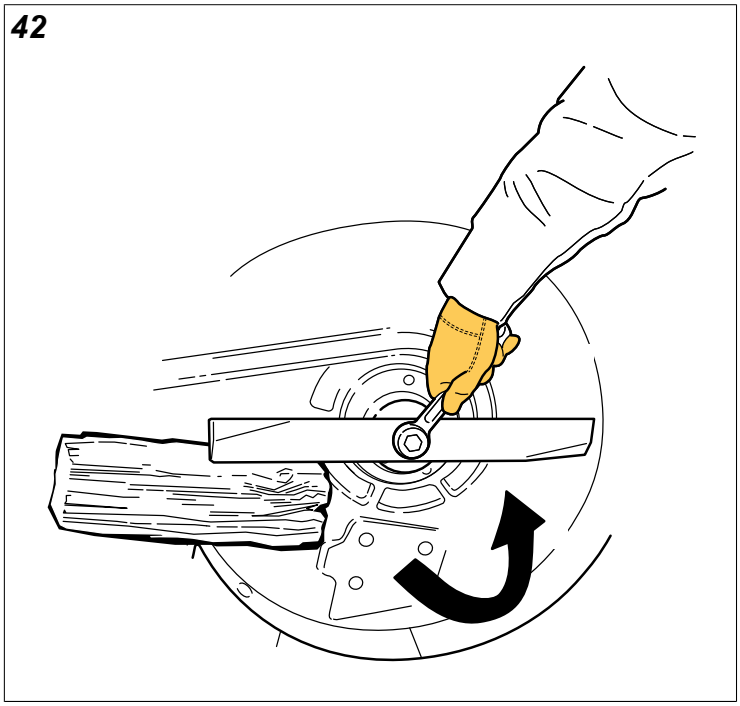

2. Using a wrench, remove the bolt securing the blade to the spindle.

Inspecting, Sharpening, and Balancing the Mower Blades

CAUTION

Laceration hazard.

Mower blades are sharp.

Always wear gloves when handling, or working near, mower blades.

1. Remove the mower blade from the unit. See *Removing the Mower Blades*.
2. Clean the blade to remove any dried grass or other debris.

DANGER

Thrown objects hazard

Avoid injury: a worn or damaged mower blade can break and a piece of the blade could be thrown into the operator's area or bystander's area resulting in serious personal injury or death.

- Inspect the mower blade every 25 hours or at least once per year.
- If the mower blade hits a solid object, stop the engine immediately and inspect the mower blades.
- Never weld or straighten bent mower blades.

3. Inspect the mower blade (Figure 43). Discard the mower blade if it has any of the following conditions:
   - More than .5" (12,7 mm) of the mower blade metal has been removed from previous sharpening or wear (A).
   - The air lifts are excessively eroded (B) and the notch (C) is .25" (6,35 mm) deep or greater.
   - The mower blade is broken or bent.

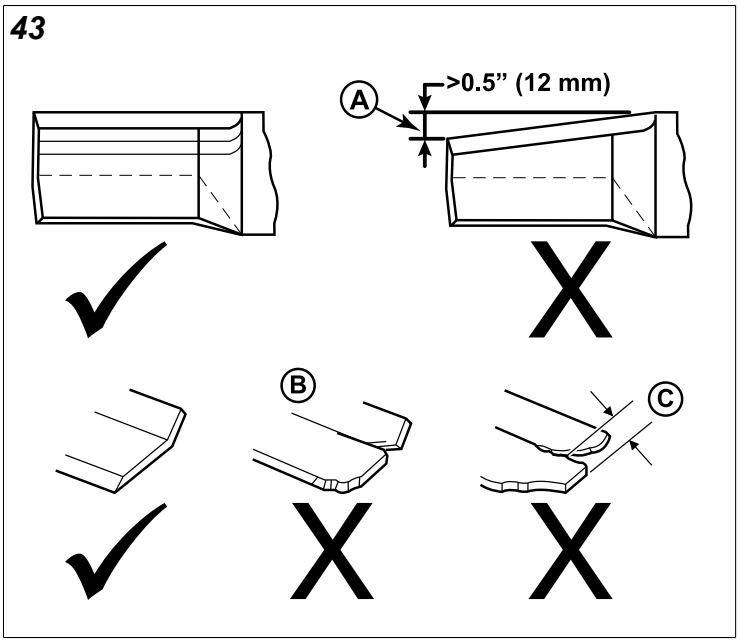

4. If the cutting edges are not sharp or have nicks, sharpen the blades.

WARNING

Thrown objects and fire hazard

Grinding mower blades throws sparks and fine metal particles that are capable of igniting gasoline and gasoline vapors, and that can injure unprotected eyes.

Be sure all flammable materials are cleared from the area where grinding will occur.

Always wear safety glasses or goggles when grinding mower blades.

5. Use a grinder, hand file, or electric blade sharpener to sharpen the mower blades by removing an equal amount of material from the cutting edge of each end of the blade.
6. Keep the original bevel (A, Figure 44) when grinding. DO NOT change the mower blade bevel.

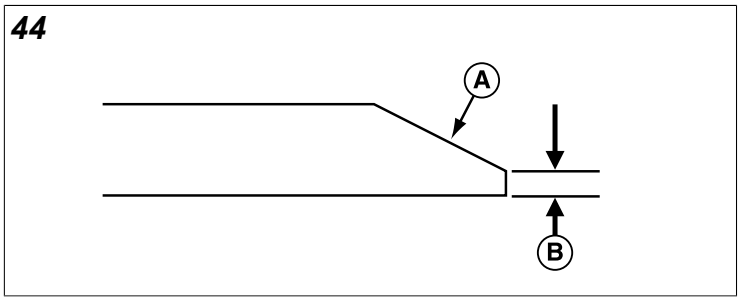

7. The mower blade should have a maximum of 1/64" (0,40 mm) cutting edge (B) or less.

CAUTION

Thrown objects hazard.

An unbalanced mower blade can create excessive vibration and damage the unit, or cause mower blade failure resulting in thrown debris.

Be sure blade is balanced before installing.

8. Clamp a nail in a bench vise, hang the blade on the nail, and position the blade in a level horizontal position as shown in Figure 45.

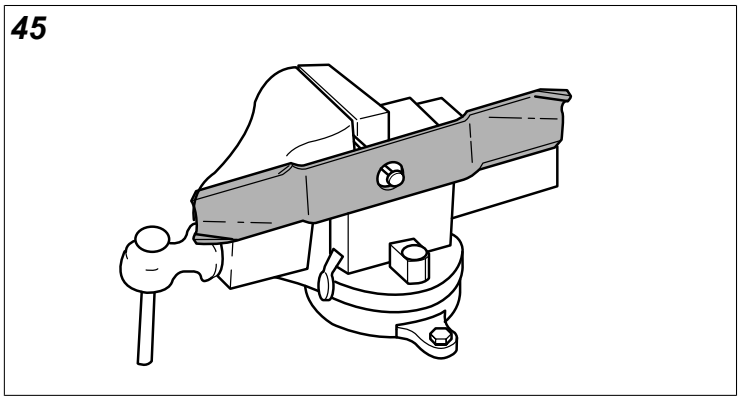

9. Check the balance of the blade. If either end of the blade moves downward the end that moves downward is heavier than the other. Sharpen the heavy end until balance is achieved.
10. Repeat the process until the mower blade remains in the horizontal, level position.

Installing the Mower Blades

CAUTION

Laceration hazard.

Mower blades are sharp.

Always wear gloves when handling, or working near, mower blades.

1. Install each mower blade with the air lifts (C, Figure 46) pointing up towards the mower deck as shown in Figure 46 and secure with the mower blade mounting bolt (A) and flat washer (B).

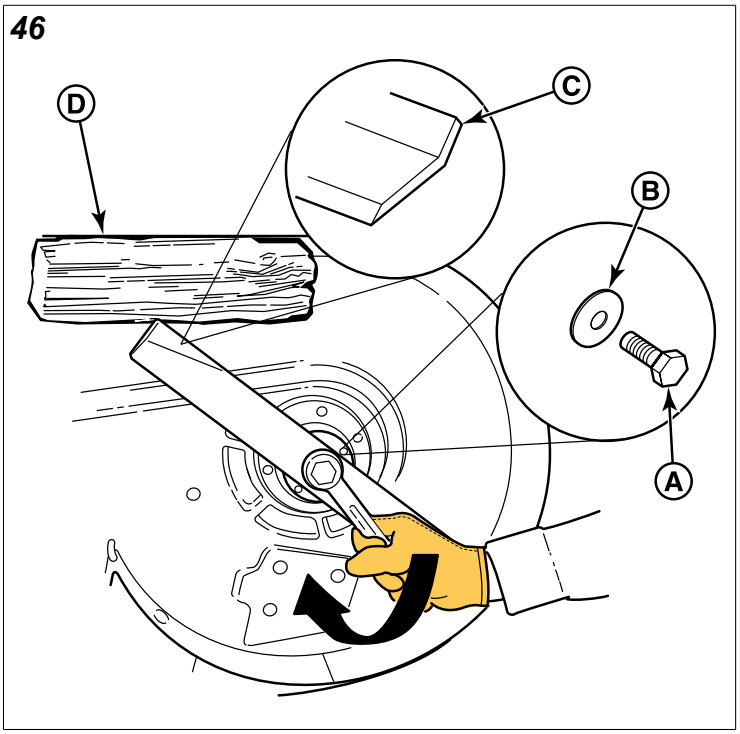

2. Wedge a wooden block (D) between the mower blade and the mower deck housing to keep the mower blade from turning and torque the blade mounting bolt to 120 ft. lbs (163 Nm).

Seat Adjustment

The seat can be adjusted forward and back. Move the lever (A, Figure 47), position the seat as desired, and release the lever to lock the seat into position.

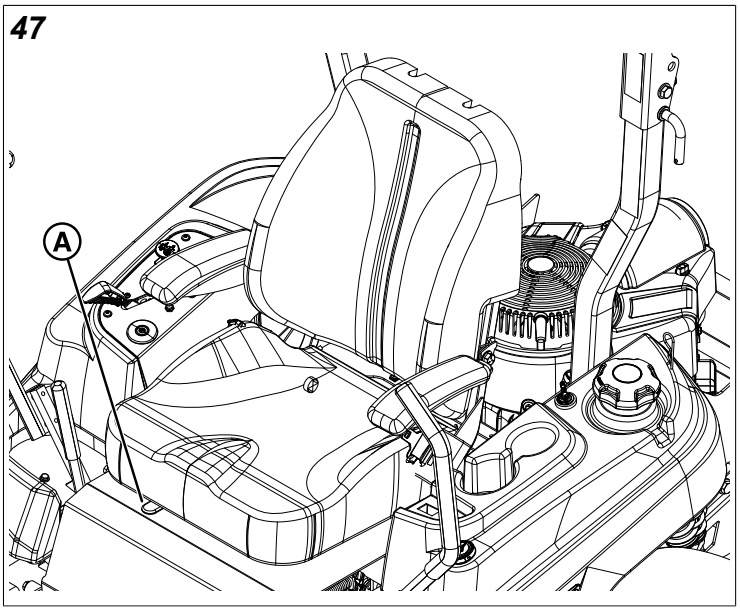

Ground Speed Control Lever Adjustment

The control levers can be adjusted in three ways. The alignment of the control levers, the placement of the control levers (how close the ends are to one another), and the height of the control levers can be adjusted.

To Adjust the Control Lever Alignment

Loosen the mount bolts (A, Figure 48) and pivot the control lever(s) (C) to align with each other.

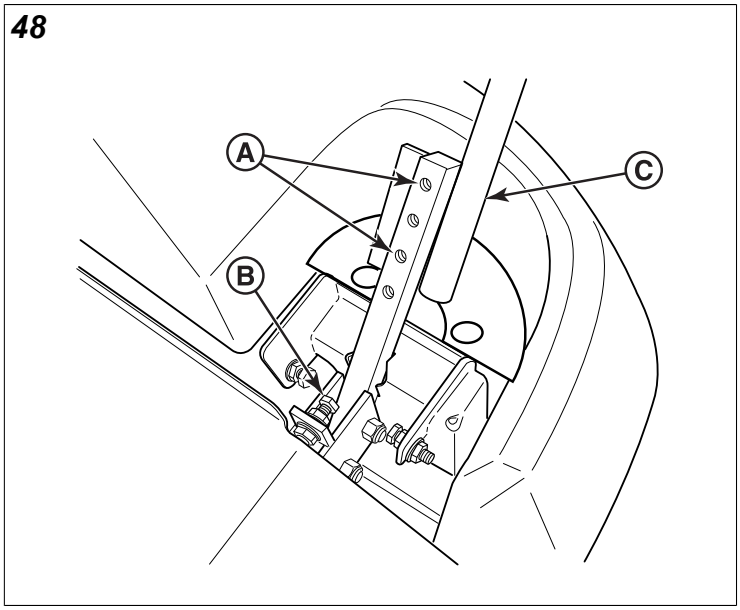

To Adjust the Control Lever Placement

Loosen the jam nuts and adjust the placement bolt (B) in or out to properly adjust the control lever end spacing.

To Adjust the Control Lever Height

Remove the mounting hardware and position the control lever either up or down from its original position. You will need to adjust the control lever alignment as described above.

Speed Balancing Adjustment

If the unit drifts to the right or left when the ground speed control levers are in the maximum forward position, the top speed of each of these control levers can be balanced by turning the adjustment bolt(s) (A, Figure 49). Only adjust the speed of the wheel that is traveling faster.

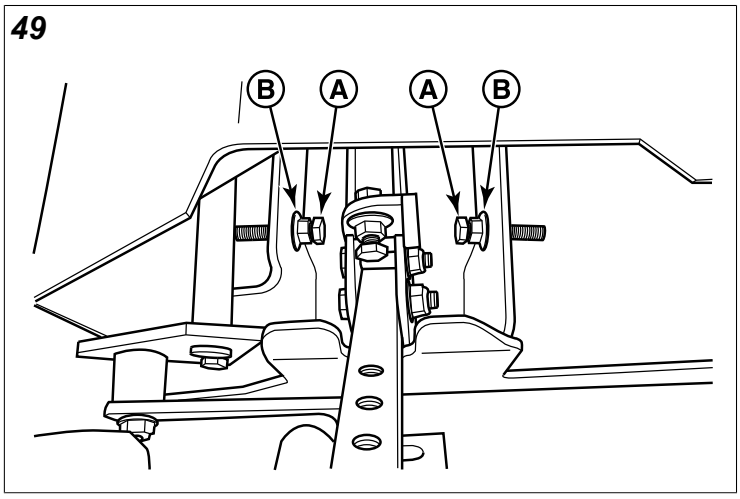

To Reduce the Speed of the Faster Wheel

1. Loosen the securing nut (B).
2. Turn the top speed adjustment bolt **counter-clockwise** to reduce the speed.
3. Tighten the securing nut when adjustment is complete.

WARNING

Unsafe Operation Hazard.

DO NOT adjust the unit for a faster overall speed forward or reverse than it was designed for.

Cutting Height Adjustment

The cutting height adjustment pin (A, Figure 50) controls the mower's cutting height. The cutting height is adjustable between 1-1/2" (3,8 cm) and 5” (12,7 cm) in 1/4” (0,6 cm) increments.

Note: Make sure that the pin is inserted into the holes in both upper and lower plates of the pin box (B).

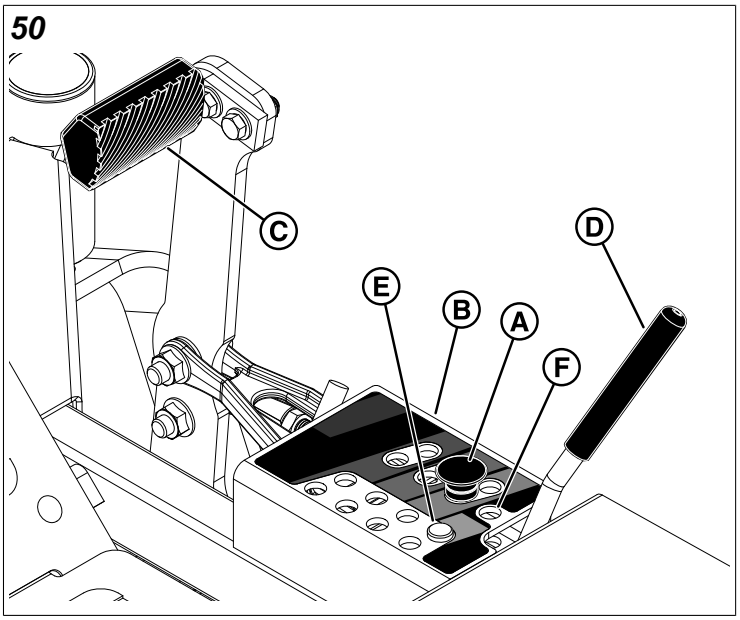

To set the cutting height at 1-1/2” (3,8 cm):

1. While sitting in the operator’s seat, press the deck lift foot pedal (C) forward until it locks into the 5" (12,7 cm) position.
2. Remove the cutting height adjustment pin from the hole that it is installed in.
3. Press the deck lift foot pedal forward and then push the lock lever (D) towards the right to release the lock.
4. Slowly release the deck lift foot pedal until it comes to rest against the stationary pin (E) in the 1-1/2” (3,8 cm) cutting height hole.
5. Place the cutting height adjustment pin in the storage hole (F).

To set the cutting height in the range of 1-3/4” (4,4 cm) and 4-3/4” (12 cm):

1. While sitting in the operator’s seat, press the deck lift foot pedal forward until it locks into the 5" (12,7 cm) position.
2. Place the cutting height adjustment pin in the desired cutting height hole.
3. Press the deck lift pedal forward and then push the lock lever towards the right to release the lock.
4. Slowly release the deck lift foot pedal until it comes to rest against the cutting height adjustment pin.

To set the cutting height at 5" (12,7 cm):

1. While sitting in the operator’s seat, press the deck lift foot pedal forward until it locks into the 5" (12,7 cm) position.
2. Place the cutting height adjustment pin in any open cutting height hole. The lift lock lever holds the mower deck at 5" (12,7 cm) while cutting.

Foot Pedal Adjustment

The deck lift foot pedal can be adjusted to accommodate the operator’s height for optimal comfort.

To adjust pedal position:

1. Remove the foot pedal (A, Figure 51) from the pedal mount tab (B).

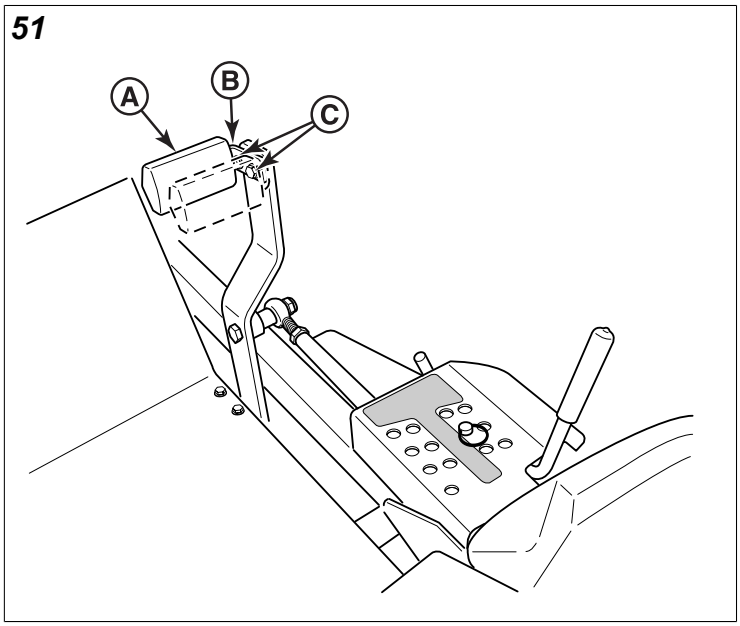

2. Remove the pedal mount hardware (C) and rotate the tab 180 degrees.
3. Reinstall the pedal mount hardware and tighten securely.
4. Reinstall the foot pedal on the pedal mount tab in the proper orientation as shown in Figure 51.

Floor Pan Removal & Installation

This unit is equipped with a removable floor pan which can be removed to provide better access to the mower deck.

1. Loosen and remove the retaining hardware (A, Figure 52) that secures the floor pan to the frame of the unit.

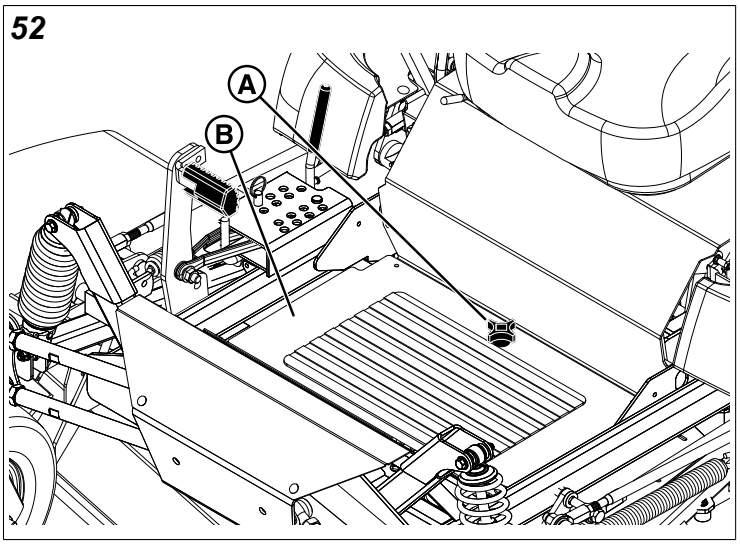

2. Tilt the back end of the floor pan up and then remove it from the unit.
3. To re-install the floor pan: Reverse the removal procedure.

Neutral Adjustment

The neutral system for this unit consists of two neutral linkage rods and a pivot that connects the ground speed control lever to the transmission. The lower rod that connects the transmission to the pivot is factory preset and should not be changed for neutral adjustment purposes. The adjustment is achieved by changing the length of the upper rod (A, Figure 53) that connects the ground speed control lever to the pivot.

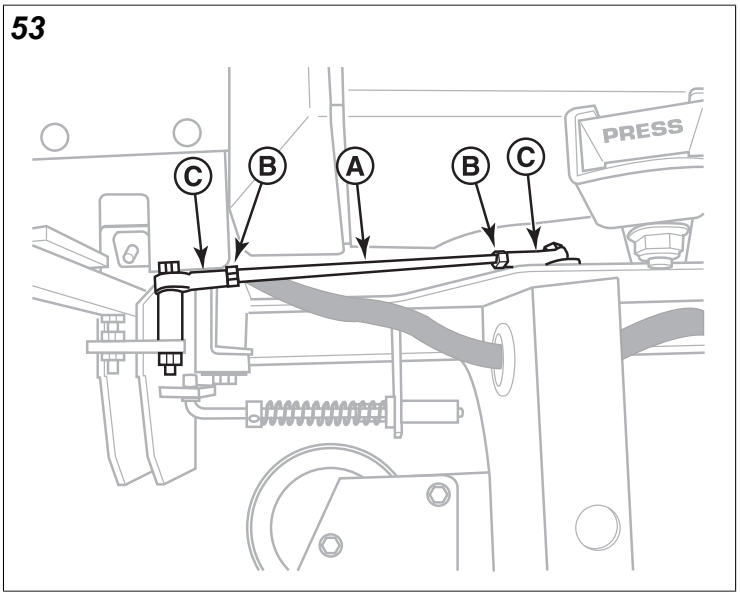

Determining if Adjustment is Necessary: If the unit "creeps" while the ground speed control levers are locked in the NEUTRAL LOCKOUT position, then it may be necessary to adjust the linkage rods.

Note: Perform this adjustment on a hard, level surface such as a concrete floor.

1. Disengage the PTO, engage the parking brake, and turn off the engine.
2. There are two nuts (B) on the linkage rod. Loosen the nuts from the ball joints (C) and turn the linkage rod to adjust.
   - If the unit creeps forward, turn the rod **clockwise** (while standing at the rear of the unit, facing forward);
   - If the unit creeps backward, turn the rod **counter-clockwise** (while standing at the rear of the unit, facing forward).
3. Lock the jam nut against the ball joints when neutral is achieved.

Note: This adjustment should not be performed while the unit is running. It may take several attempts to achieve neutral, depending on how much the unit creeps.

Return-to-Neutral Adjustment

Prior to performing this procedure the *Neutral Adjustment* procedure must be completed.

WARNING

To avoid serious injury, perform adjustments only with the engine stopped, the key removed, and the unit parked on level ground.

1. Position the ground speed control levers into the NEUTRAL LOCKOUT position
2. Loosen the set collar (A, Figure 54) on the neutral return rod (B).

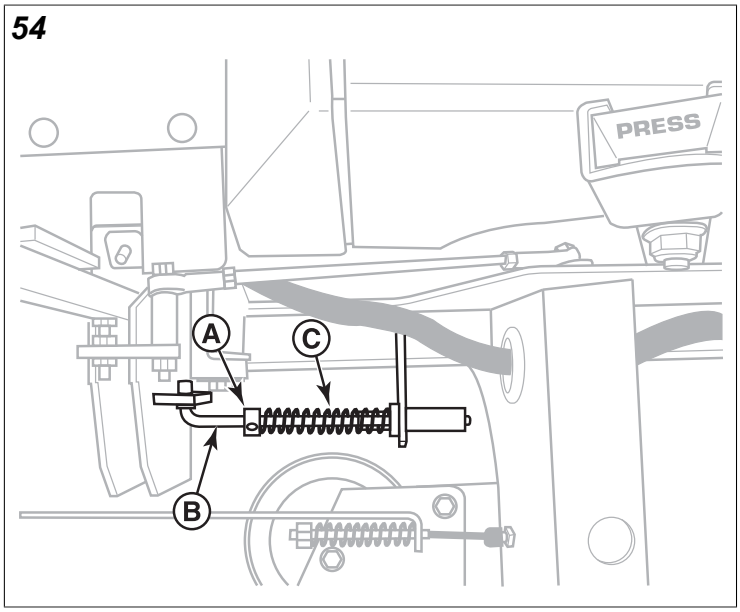

3. Position the set collar along the neutral return rod until it contacts and very lightly compresses the neutral return spring (C).
4. Move the ground speed control levers into the operating position, pull rearward, and release.
5. Move the ground speed control levers out towards the NEUTRAL LOCKOUT position.
   - if the ground speed control lever aligns with the notch in the neutral lock plate, adjustment is complete;

- if the ground speed control lever stops it's return motion past the notch (while standing at the rear of the unit), position the set collar so the neutral return spring is less compressed.
- if the ground speed control lever stops it's return motion before the notch (while standing at the rear of the unit), position the set collar so that the neutral return spring is more compressed.

6. Repeat the process as necessary until the ground speed control lever aligns with the notch in the neutral lock plate.

Note: It is important to note that after every adjustment of the neutral return rod, the lever must be pulled rearward and released to properly check the return-to-neutral position.

Neutral Lockout Adjustment

Prior to adjusting the neutral lockout, the neutral and return-to-neutral must be properly adjusted.

1. Park the unit on a flat, level surface such as a concrete floor. Disengage the PTO, engage the parking brake, turn the ignition switch to OFF, and remove the ignition key.
2. Chock the wheels of the unit to prevent movement.
3. Raise the seat to gain access to the neutral lockout components.
4. Loosen the jam nuts (A, Figure 55) on the neutral lockout bolts (B).

55

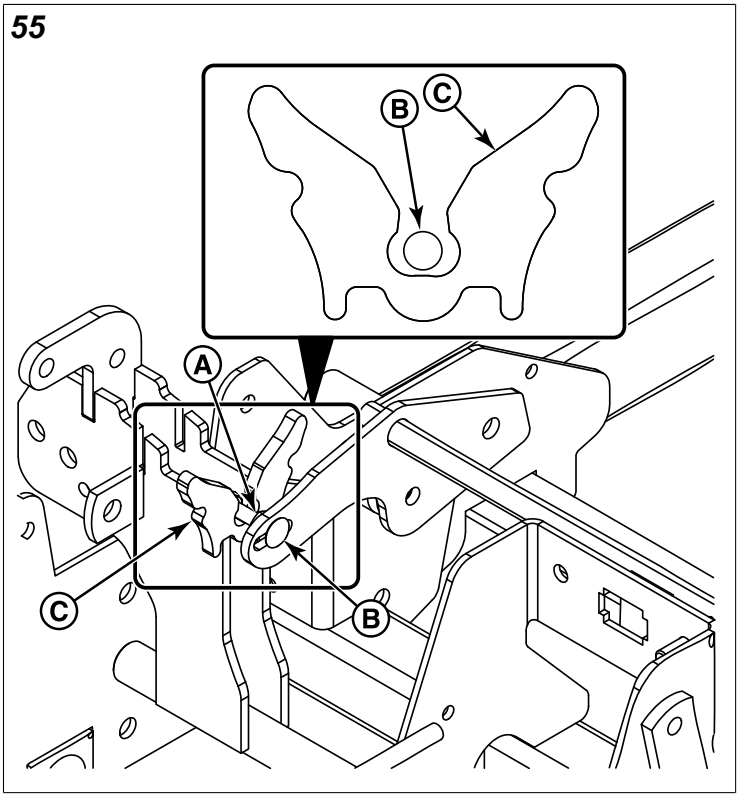

5. Engage the parking brake. The neutral lockout bolts will enter the notches of the neutral lockout plates (C).
6. Position the neutral lockout bolts to the center of the notches of the neutral lockout plates.
7. Re-tighten the jam nuts.

Parking Brake Adjustment

The parking brake mechanism consists of two parking brake cables (A, Figure 56) that connect the parking brake cable shaft to the parking brake control arms on the transmissions. There is a parking brake spring (B) on each park brake cable located underneath the seat plate and connected to the parking brake shaft. The position of the of the parking brake cables in the transmission cradle and the frame of the unit is factory preset and should not be changed for parking brake adjustment procedures. The adjustment is achieved by changing the compressed spring length of the parking brake springs.

56

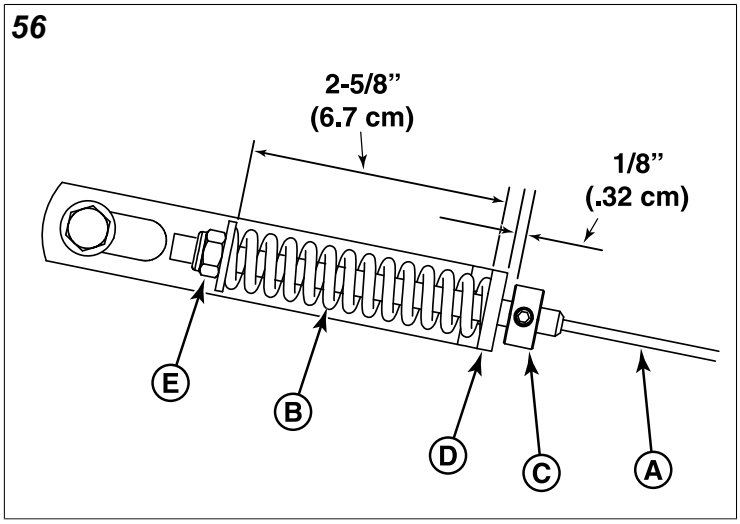

1. Disengage the PTO, engage the parking brake, stop the engine, and chock the tires.
2. Locate the parking brake springs located underneath the seat plate of the unit.
3. With the parking brake engaged measure the compressed spring lengths. Both springs should measure 2-5/8" (6.7 cm) when compressed.
4. If the length of the springs does not equal 2-5/8" (6.7 cm), the length of the springs will need to be adjusted.
5. Disengage the parking brake.
6. Loosen the set collars (C) and slide them away from the backs of the parking brake spring brackets (D).

CAUTION

Do not adjust the springs to be shorter than 2-3/8" (6.03 cm) when compressed. This may damage the spring mechanism.

7. Turn the adjustment nuts (E) to compress or release the spring.
8. Engage the parking brake and re-measure the springs. Continue this process until the compressed length of the each spring measures 2-5/8" (6.7 cm).
9. Position the set collars 1/8" (.32 cm) away from the parking brake spring brackets and tighten.

If this does not correct the braking problem, see your authorized STIHL servicing dealer.

Deck Lift Rod Timing Adjustment

Checking the Deck Lift Rod Timing

1. Park the unit on a flat, level surface. Disengage the PTO, stop the engine, and engage the parking brake. Verify the tires are inflated to the correct pressure.
2. To check the inner lift rod (A, Figure 57) timing, measure and record the distance between the inner lift pivots (B) and the inner rod pivots (C). Repeat for the other side of unit.

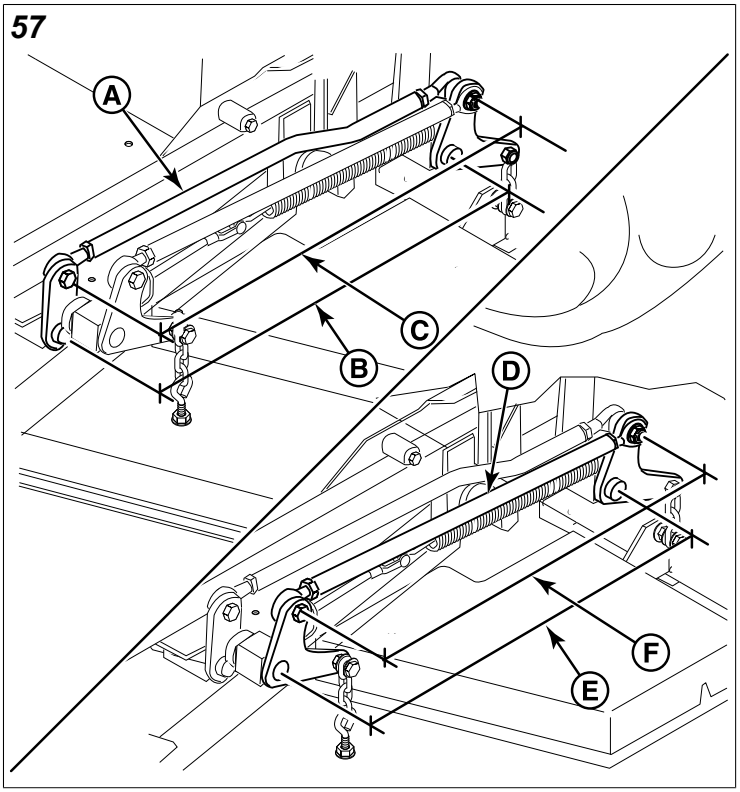

3. To check the outer lift rod (D) timing, measure and record the distance between the outer lift pivots (E) and the outer rod pivots (F). Repeat for other side of unit.
4. If the measurements for the inner rods are equal, and the measurements for the outer rods are equal, no further adjustment is required. If the measurements are NOT equal (greater than 1/8” (3,17 mm) difference), adjustment is required, continue with *Adjusting the Deck Lift Rod Timing*.

Adjusting the Deck Lift Rod Timing

1. Lock the deck lift pedal in the 5" (12,7 cm) position. Remove the height adjustment pin (A, Figure 58) and lower the mower deck.

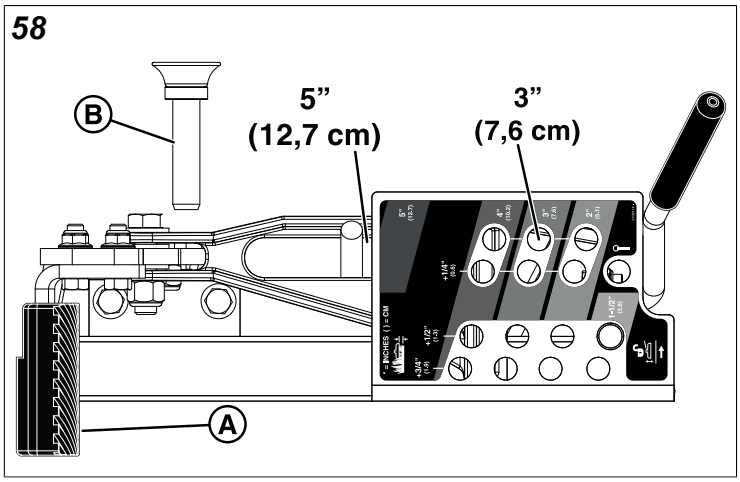

2. To ensure that the deck is in the lowest position, push the pedal by hand towards the rear of the unit and install the height adjustment pin in the 3” (7,6 cm) position to hold in place.
3. Block up the mower deck until all hanger chains are slack.
4. To adjust the inner lift rod (A, Figure 59): Loosen the jam nut (B) on the front ball joint (C) then remove the 1/2” hardware (D) fastening the ball joint to the lift pivot arm. Turn the ball joint **clockwise** to shorten the distance between the rod pivots or **counter-clockwise** to lengthen the distance between the rod pivots. Reinstall the ball joint on the lift pivot arm and secure with the 1/2” hardware previously removed. Tighten the jam nut against the lift rod.

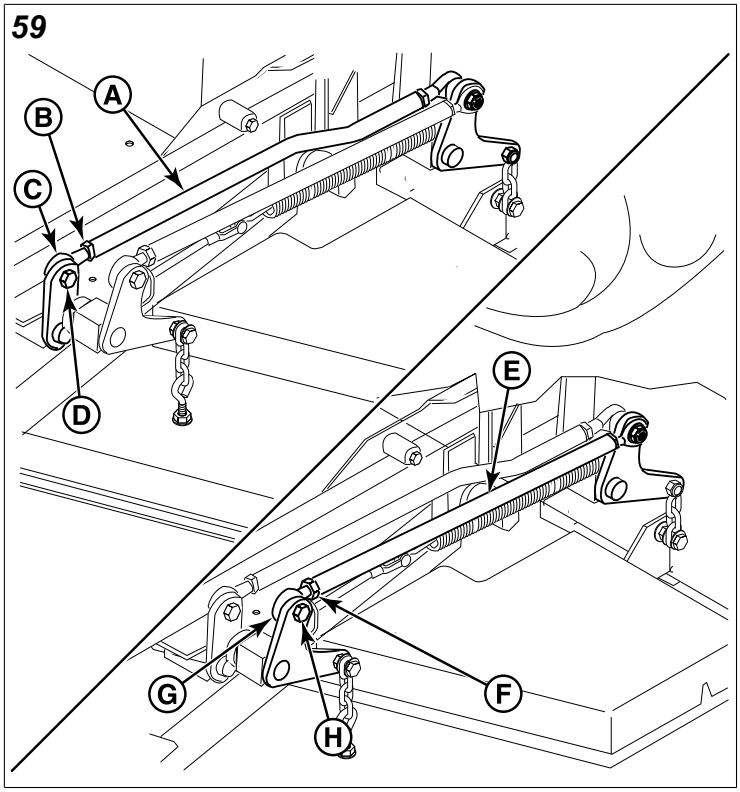

5. To adjust the outer lift rod (E): Loosen the jam nut (F) on the front ball joint (G) then remove the 1/2” hardware (H) fastening the ball joint to the lift pivot arm. Turn the ball

joint **clockwise** to shorten the distance between the rod pivots or **counter-clockwise** to lengthen the distance between the rod pivots. Reinstall the ball joint on the lift pivot arm and secure with the 1/2” hardware previously removed. Tighten the jam nut against the lift rod.

6. Remove blocks from under the mower deck.
7. Remove the cutting height adjustment pin from in front of the deck lift pedal arm. Lift mower deck and reinstall adjustment pin in desired mowing height.

Deck Leveling Adjustment

Before adjusting the deck level, the deck lift rod timing must be checked and/or adjusted.

Determining if the Deck Leveling Needs to be Adjusted

1. Park the unit on a flat, level surface. Disengage the PTO, engage the parking brake, turn the ignition switch to OFF, and remove the ignition key.
2. Lock the deck lift pedal in the TRANSPORT position. Place the cutting height adjustment pin in the 4" position and lower the deck lift pedal until the deck lift arm contacts the cutting height adjustment pin.
3. Verify that the tires are inflated to the correct pressure.
4. Verify that the mower blades are flat, and not bent or broken. A bent or broken blade must be replaced.

WARNING

Avoid Injury! Mower blades are sharp.
Always wear gloves when handling blades or working near blades.

5. See Figure 60. Position the outside mower blades so they face front-to-back.

60

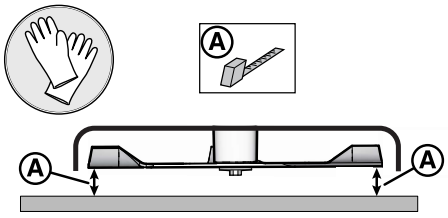

6. Measure the front tip (A, Figure 60) of the blade from the cutting edge to the ground.
7. Measure the rear tip (A) of the blade from the cutting edge to the ground.
8. Repeat the process on the other side of the machine.
   - the front measurements should equal 4" (10,2 cm).
   - the rear measurements should equal 4-1/4" (10,8 cm)

   If the measurements do not equal the measurements as listed above, adjust the deck leveling.

Deck Leveling Adjustment

1. Set the mower deck to the 4" (10,2 cm) cutting height position.
2. Measure from the front tips of the blades to the ground.
   - If the measurements between the front tips of the blades and the ground is greater than 4-1/4" (10,8 cm) or less than 3-3/4" (9,5 cm) the mounting hardware will be to be positioned into different holes.
   - If the measurements between the front tips of the blades and the ground falls between 3-3/4 (9,5 cm) and 4-1/4" (10,8 cm), skip to step #6.
3. Place blocking underneath all four corners of the mower deck until the hanger chains are slack.
4. Position the hardware (A, Figure 61) that secures the front hanger chain (B) to the front mounting plate (C).
   - If the measurement between the front tip of the blade and the ground was 4-1/4" (10,8 cm) or higher, position the hardware in the next higher hole in the front mounting plate.
   - If the measurement between the front tip of the blade and the ground was 3-3/4" (9,5 cm) or lower, position the hardware in the next lower hole in the front mounting plate.

61

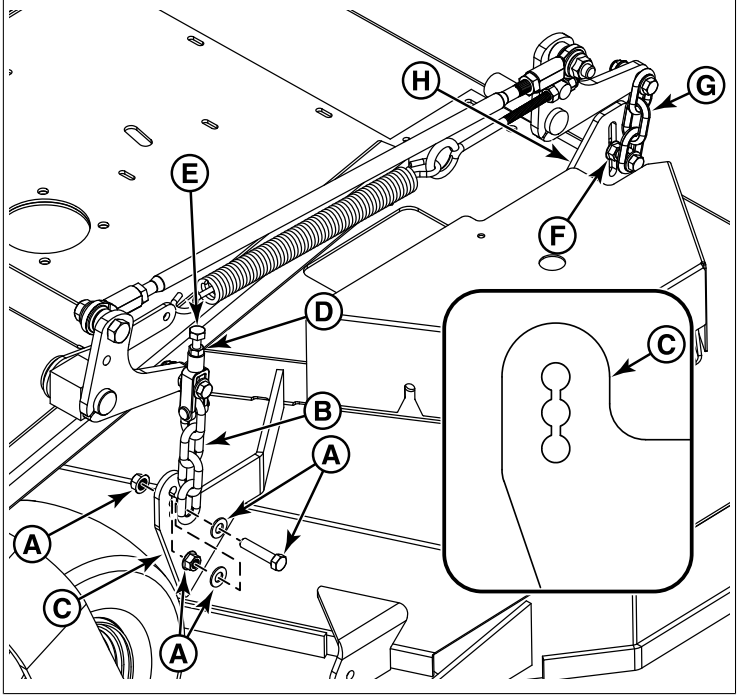

5. Repeat step #4 for the other side of the deck.
6. Remove the blocking from underneath the deck and replace with 2 X 4 blocks (B, Figure 62) under each corner of the mower deck with the 3-1/2" (8,9 cm) sides being vertical. Place a 1/4" (0,64 cm) thick spacer (C) on the top of the rear blocks. The arrow (A) points towards the front of the mower deck.

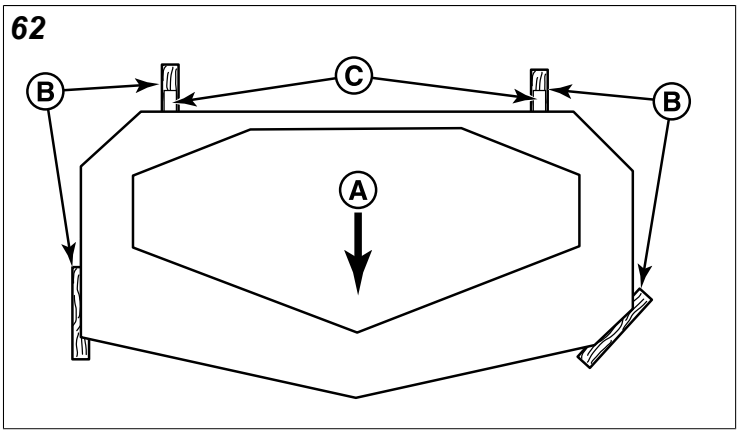

7. Check the measurements between the front tips of the mower blades and the ground.
   - If the measurements are greater than 4" (10,2 cm) loosen the jam nut (D, Figure 61) and turn the fine adjustment nut (E) **counter-clockwise** to lower the deck.
   - If the measurements are less than 4" (10,2 cm) loosen the jam nut and turn the fine adjustment bolt **clockwise** to raise the deck.
8. Once the 4" measurement from the front tip of the blade is achieved, tighten the jam nut.
9. Loosen the nuts (F) that secure the rear hanger chain (G) to the rear mounting plate (H) and allow the rear of the deck to rest on the 2 X 4's and 1/4" (0,64 cm) spacers.
10. Repeat steps #7 - #9 for the other side of the unit.
11. Remove all blocking from beneath the mower deck.
12. Perform the *Determining if the Deck Leveling Needs to be Adjusted* procedure to verify that the deck has been leveled correctly.

Deck Lift Assist Spring

Some models are equipped with deck lift assist springs (A, Figure 63) that assist the operator in raising the mower deck with the deck lift pedal. The deck lift assist springs are factory set to provide optimal lifting performance.

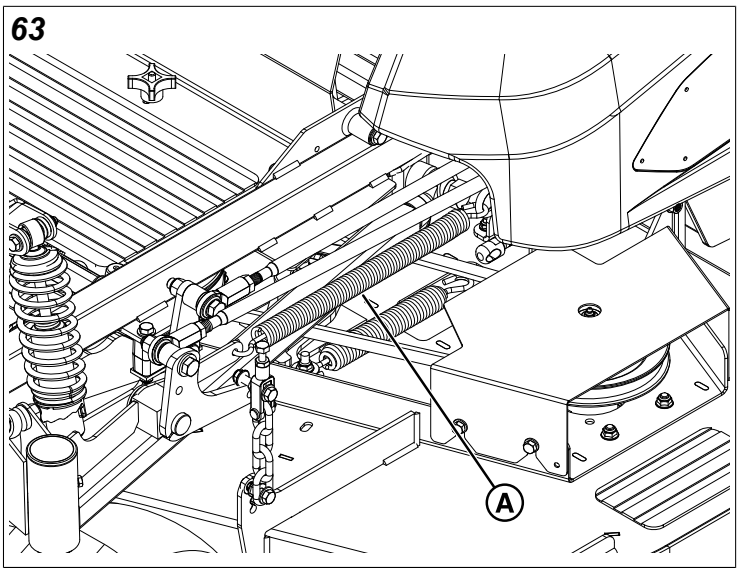

Although it is fastened with a multi-position anchor, this is **not an adjustment point**.

Do NOT attempt to adjust the spring length or lifting performance will be compromised.

Long Left Hand Deck Belt Replacement

NOTICE To avoid damaging belts, **do not pry over pulleys**.

1. Park the unit on a smooth level surface such as a concrete floor. Disengage the PTO, engage the parking brake, turn the ignition switch to OFF, and remove the ignition key.
2. Lower the mower deck to it's lowest cutting position and remove the mower deck guards and floor pan to gain access to the mower deck drive belts.

WARNING

Use extreme caution when rotating the idler arm with the breaker bar, due to the increased tension in the spring as the idler arm is being rotated. Injury may result if the breaker bar is prematurely released while the spring is under tension.

3. Using a 1/2" breaker bar (A, Figure 64) place the square end in the opening in the PTO clutch drive idler arm (B) and rotate the idler arm **clockwise**, which will relieve tension on the belt exerted from the idler arm. Remove the belt from the left hand side spindle pulley (C). Carefully release the tension on the breaker bar.

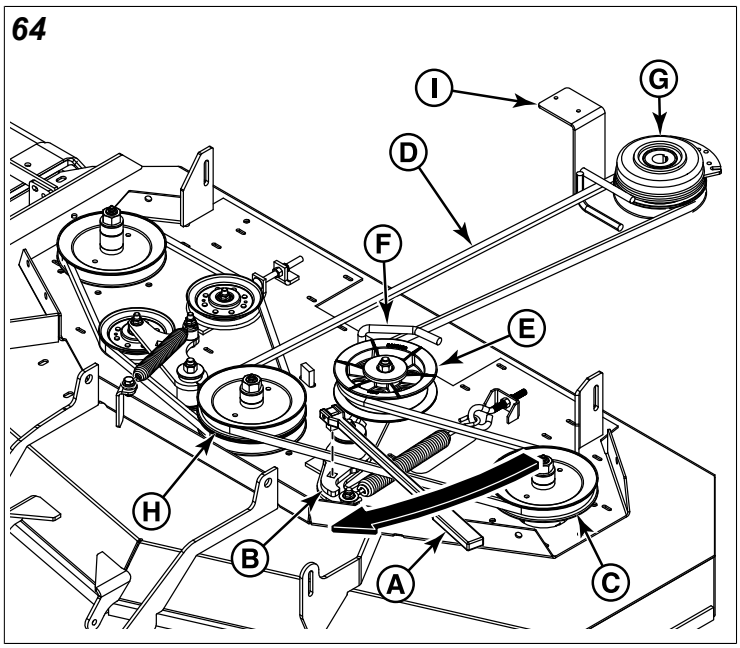

4. Remove the long left hand belt (D) from the adjustable idler pulley (E) and it's belt guide (F).
5. Remove the old long left hand belt from the PTO clutch pulley (G) and the top groove of the center spindle pulley (H).

6. Install the new long left hand belt onto the PTO clutch pulley and the center spindle pulley.
7. Install the long left hand belt into the belt guide on the adjustable idler pulley.
8. Verify that the V-side of the belt runs in the pulley grooves of the center spindle pulley and the PTO clutch pulley. Make sure that the back side of the belt contacts the face of the adjustable idler pulley. Make sure that the belt is correctly routed in the belt guides (F & I).
9. Using a 1/2" breaker bar place the square end in the opening in the PTO clutch drive idler arm and rotate the idler arm **clockwise**, which will relieve tension on the belt exerted from the idler arm. Install the long left hand belt onto the left hand spindle pulley. Carefully release the tension on the breaker bar.
10. Measure the coil-to-coil length (A, Figure 65) of the long left hand belt tensioning spring (B). The measurement should equal 10-1/4" (26 cm) ± 1/8 (0,32 cm). If not, loosen the jam nut (C) on the eye bolt (D) and then turn the adjustment nut (E) until the measurement is achieved. Tighten the jam nut.

65

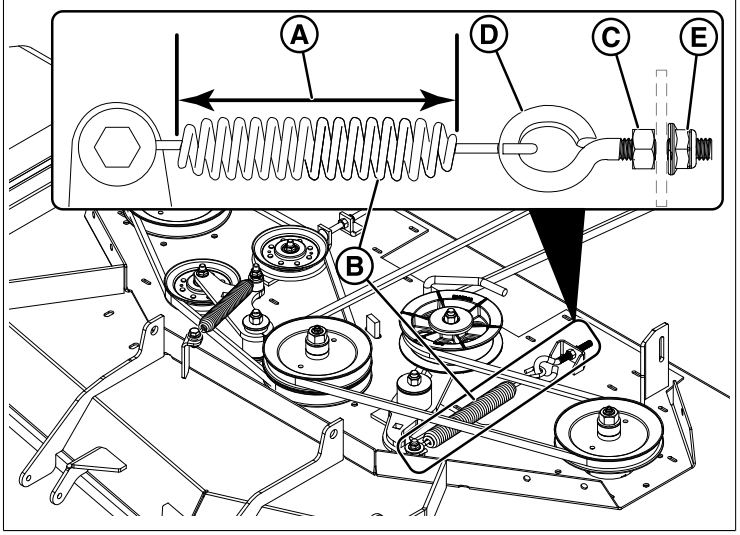

11. Re-install the mower deck guards and the floor pan.
12. Run the mower under no-load condition for about five (5) minutes to break in the new belts.

Short Right Hand Deck Belt Replacement

NOTICE

To avoid damaging belt, **do not pry over pulleys**.

1. Park the unit on a smooth level surface such as a concrete floor. Disengage the PTO, engage the parking brake, turn the ignition switch to OFF, and remove the ignition key.
2. Lower the mower deck to it's lowest cutting position and remove the mower deck guards and floor pan to gain access to the mower deck drive belts.
3. Remove the long left hand deck belt. See *Long Left Hand Deck Belt Replacement* for removal instructions.

WARNING

Use extreme caution when rotating the idler arm with the breaker bar, due to the increased tension in the spring as the idler arm is being rotated. Injury may result if the breaker bar is prematurely released while the spring is under tension.

4. Rotate the spindle drive idler arm (A, Figure 66) **clockwise**, which will relieve the tension on the belt exerted from the idler arm. Remove the belt from the rear idler pulley (B) and then the right hand spindle pulley (C). Carefully release the tension on the spindle drive idler arm.

66

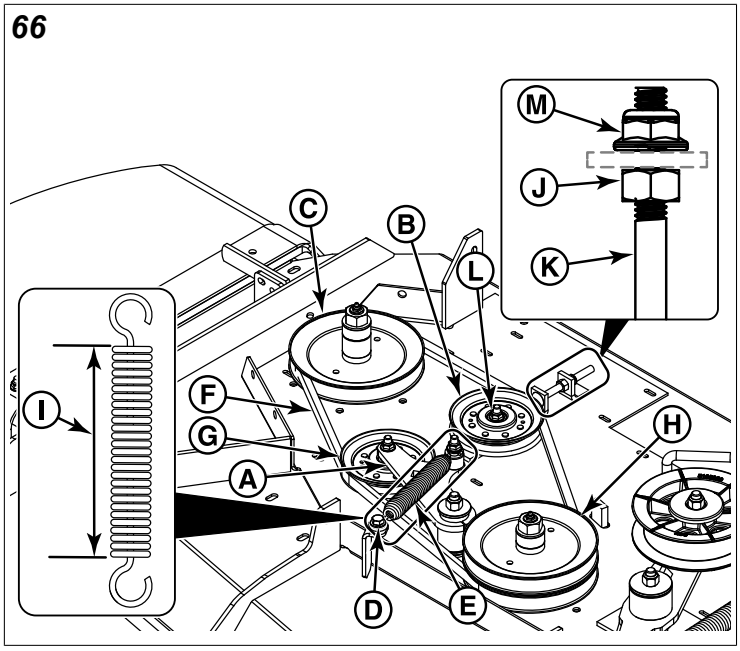

5. Remove the spring anchor hardware (D) that anchors the idler arm spring (E) to the mower deck.
6. Remove the old short right hand belt (F) from the front idler pulley (G) and the center spindle pulley (H).
7. Install the new short right hand belt onto the center spindle pulley and the front idler pulley.
8. Re-connect the idler arm spring. Install the 3/8" washer and then the spacer onto the shaft of the 3/8" bolt. Install the hook of the idler arm spring around the body of the spacer and then install the bolt into the spring anchor tab and then secure with the 3/8" nylock flange nut.
9. Rotate the spindle drive idler arm **clockwise**, which will relieve the tension on the belt exerted from the idler arm. Re-install the belt on the right hand spindle pulley and the rear idler pulley. Make sure that the V-side of the belt runs in the grooves of all four pulleys. Carefully release the tension on the spindle drive idler arm.
10. Set the mower deck to it's 3-1/2" (8,9 cm) cutting position.
11. Use the list that follows to determine the correct spring length for your unit.
    - **Models with 52" Mower Decks:** 6-1/8" (15,6 cm) ± 1/8 (0,32 cm)

- **Models with 60" Mower Decks:** 6-5/8" (16,8 cm) ± 1/8 (0,32 cm)

12. Measure the coil-to-coil length (I) of the idler arm spring. The measurement should equal the measurement as indicated in the list. If not, loosen the jam nut (J) on the carriage bolt (K) and the 3/8" nut (L) that secures the rear idler pulley (B) to the deck. This will allow the rear idler pulley to move in it's adjustment slot.
13. Turn the adjustment nut (M) until the measurement as indicated in the list is achieved. Tighten the jam nut and the 3/8" nut that secures the rear idler pulley to the deck.
14. Re-install the long left hand deck belt. See *Long Left Hand Deck Belt Replacement* for re-installation instructions.
15. Re-install the mower deck guards and the floor pan.
16. Run the mower under no-load condition for about five (5) minutes to break in the new belts.

Transmission Drive Belt Replacement

The illustration depicts the transmission drive belt setup as seen from the top side of the unit and the arrow (A, Figure 67) indicates the front of the unit.

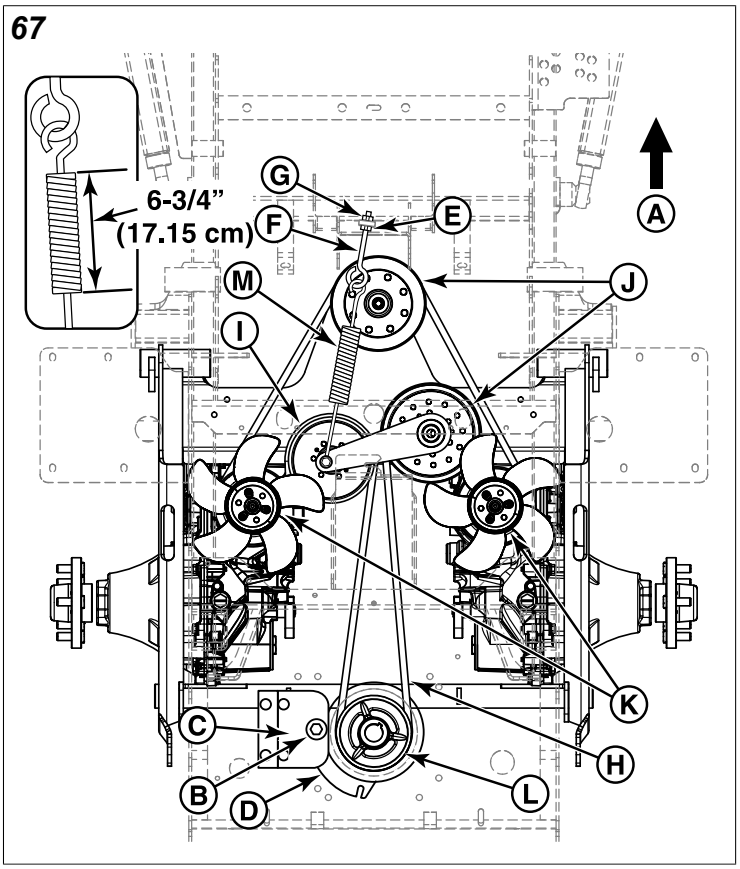

1. Park the zero-turn riding mower on a smooth, level surface such as a concrete floor. Disengage the PTO, engage the parking brake, turn the ignition switch to OFF, and remove the key.
2. Remove the mower belt. See *Long Left Hand Deck Belt Replacement* for removal instructions.
3. Remove the hardware (B) that secures the clutch anchor pad (C) to the PTO clutch (D) and disconnect the wire harness from the PTO clutch.

WARNING

STORED ENERGY DEVICE: Improper release of the belt tension spring can result in personal injury. Use extreme caution when removing the spring.

4. Loosen the jam nut (E) on the spring anchor eye bolt (F).
5. Loosen the adjustment nut (G) on the spring anchor eye bolt to release the majority of the belt tension. Use caution to remove the nut to completely release the tension.
6. Remove the old belt and replace with a new one (H). Make sure the V-side of the belt runs in the grooves of the adjustable idler pulley (I), the front stationary idler pulleys (J), both transmission pulleys (K), and the crankshaft pulley (L).
7. Install the spring anchor eye bolt into the spring anchor tab and loosely fasten the adjustment nut.
8. Tighten the nut until the spring (M) achieves a coil-to-coil measurement of 6-3/4" (17,15 cm).
9. Tighten the jam nut.
10. Install the clutch anchor pad to the PTO clutch and secure using the hardware previously removed. Connect the wire harness to the PTO clutch.
11. Install the mower belt. See *Long Left Hand Deck Belt Replacement* for installation instructions.

Suspension Adjustment

The shock assemblies (A, Figure 68) can be adjusted to allow the operator to customize the ride according to the operator's weight and/or operating conditions.

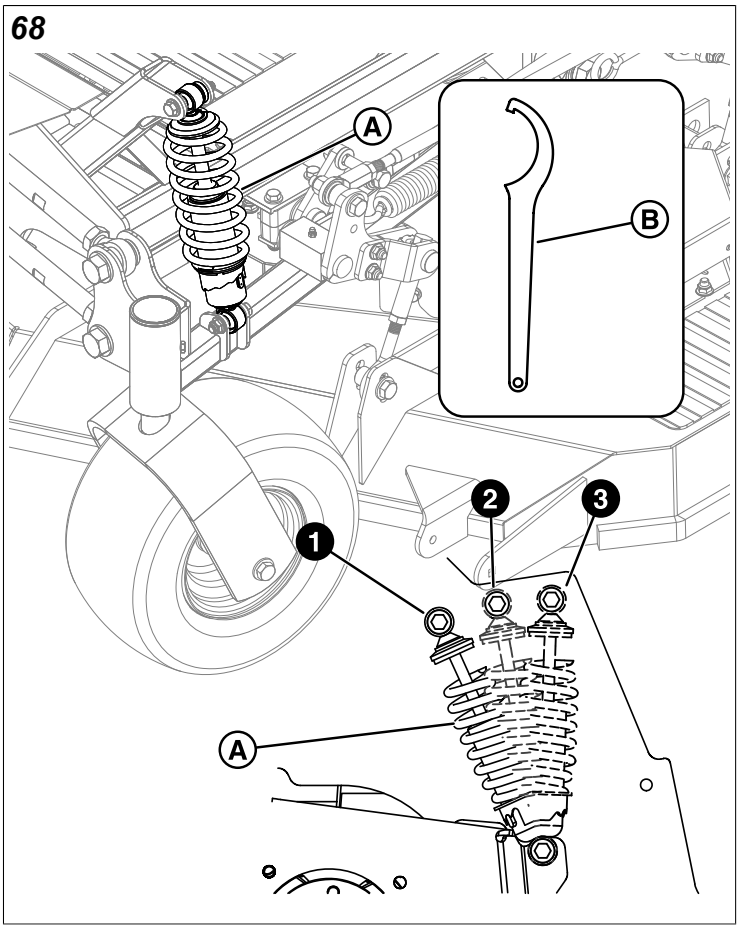

The front shock assemblies can be adjusted by changing the spring's pre-load.

The rear shock assemblies can be adjusted by changing the spring's pre-load and/or upper mounting position.

A spanner wrench (B) was included with the literature packet that came with this unit. The spanner wrench is used to adjust the spring's pre-load.

Items to consider before adjusting the suspension:

- Less spring pre-load should be used with light weight operators, which will provide a softer, more cushioned ride.
- More spring pre-load should be used with heavy weight operator's, which will provide a stiffer, more rigid ride.
- There are three positions in which the upper shock mount can be positioned to. If adjusting the spring's pre-load does not achieve the ride requirement, the shock should be moved to the next higher numbered upper shock mounting position to achieve the desired ride requirement.
- Before adjusting the upper shock mount to a higher numbered position you should attempt to achieve the ride height through the spring's pre-load adjustment.
- Shock mounting position #3 should always be used when a rear-mounted grass collection system is installed on the unit.

To Adjust the Spring Pre-load:

This procedure details the process for adjusting the spring's pre-load for the rear shocks. **To adjust the spring's pre-load for the front shocks only steps #1 and #5 are required.**

The shock's pre-load adjustment consists of rotating the pre-load adjuster (A, Figure 69) with a spanner wrench so that the adjuster rides either up or down on the shock's fixed point (B) into one of the adjuster's five notch positions. As the adjuster moves up towards the spring, the spring is more compressed which creates more spring load. As the adjuster moves down away from the spring, the spring is less compressed creating less spring pre-load.

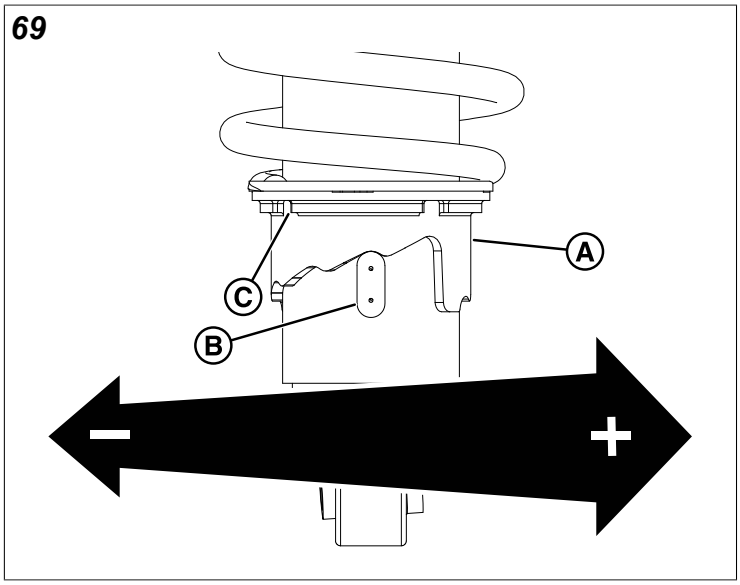

1. Park the unit on a flat, level surface such as a concrete floor. Disengage the PTO, engage the parking brake, and turn the ignition switch to OFF to stop the engine.
2. Chock the front wheels to prevent the unit from rolling.
3. Raise the rear of the unit and secure with jack stands.
4. Remove the rear drive tires.

WARNING

Spring loaded components can kick back causing injury. Use two hands when adjusting the shock springs with the spanner wrench. This will prevent the wrench from slipping while pressure is being applied.

5. Using the supplied spanner wrench (B, Figure 68), insert the tip of the wrench into the adjustment notch (C, Figure 69) in the pre-load adjuster (A). While holding the wrench in place with one hand:
   - Turn the pre-load adjuster so that it moves up towards the spring, compressing it, to increase the springs's pre-load;
   - Turn the pre-load adjuster so that it moves down away from the spring, decompressing it, to decrease the spring's pre-load.

Note: If necessary, a replacement spanner wrench can be ordered through your authorized STIHL servicing dealer.

6. Re-install the rear drive tires. Torque the lug bolts to 85-95 ft.lbs. (115-129 Nm). Remove the jack stands from under the unit.

Note: If a collection system is installed on the unit it is recommended that the rear suspension be adjusted stiffer due to the added weight of the collection system.

To Adjust the Upper Mounting Position (Rear Shocks):

1. Park the unit on a flat, level surface such as a concrete floor. Disengage the PTO, engage the parking brake, and turn the ignition switch to OFF to stop the engine.
2. Chock the front wheels to prevent the unit from rolling. Raise the rear of the unit and secure with jack stands. The jack stands must be under the bumper of the unit.
3. Position the jack underneath the rear cross member of the transmission cradle and slowly raise the rear suspension to relieve the pressure on the upper shock mounting bolts.

Note: This will require small adjustments to the jack's position. The shock should move freely on the mounting bolt when the pressure is relieved.

4. Remove the upper shock mounting hardware and pivot the shock to the next higher numbered position (see Figure 68). Adjust the jack to align the shock mounts to shocks.
5. Remove the jack from under the transmission cradle.
6. Remove the jack stands from underneath the unit.

Battery Maintenance

DANGER

Be careful when handling the battery.

Battery acid can cause severe burns. Avoid contact with skin. Wear protective gear (safety goggles/face shield and gloves) when working with the battery.

Keep the battery out of reach of children.

To avoid an explosion, keep open flames and sparks away from the battery, especially while charging.

When removing or installing battery cables, disconnect the negative cable FIRST and reconnect it LAST. If not done in this order, the positive terminal can be shorted to the frame by a tool.

Cleaning the Battery and Cables

This unit is equipped with a maintenance-free BCIU1 battery.

1. Disconnect the cables from the battery, negative [-] cable first (B, Figure 70).

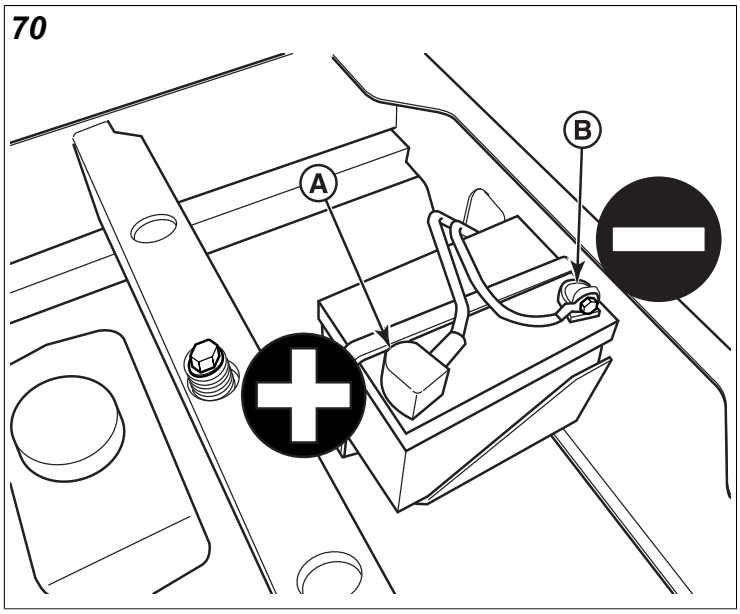

2. Clean the battery terminals and cable ends with a wire brush until shiny.
3. Reinstall the battery and reattach the battery cables, positive [+] cable first (A).
4. Coat the cable ends and the battery terminals with petroleum jelly or non-conducting grease.

Checking Battery Voltage

A voltmeter can be used to determine condition of the battery. When the engine is off, the voltmeter shows battery voltage, which should be 12 volts. When the engine is running, the voltmeter shows voltage of charging circuit which normally is 13 to 14 volts.

A dead battery, or one too weak to start the engine, may not mean the battery needs to be replaced. For example, it may mean that the alternator is not charging the battery properly. If there is any doubt about the cause of the problem, see your authorized STIHL servicing dealer. If you need to replace the battery, follow the steps under *Cleaning the Battery and Cables*.

Charging the Battery

WARNING

Keep open flames and sparks away from the battery; the gasses coming from it are highly explosive. Ventilate the battery well during charging.

A dead battery or one too weak to start the engine may be the result of a defect in the charging system or other electrical component. If there is any doubt about the cause of the problem, see your authorized STIHL servicing dealer.

To charge the battery, follow the instructions provided by the battery charger manufacturer as well as all warnings included in the OPERATOR SAFETY section of this manual. Charge the battery until fully charged. Do not charge at a rate higher than 10 amps.

Jump Starting with Auxiliary (Booster) Battery

Jump starting is not recommended.

Troubleshooting

While normal care and regular maintenance will extend the life of your unit, prolonged or constant use may eventually require that service be performed to allow it to continue to operate properly.

This troubleshooting guide lists the most common problems, their causes, and remedies.

Refer to MAINTENANCE PROCEDURES for instructions on how to perform most of these minor adjustments and service repairs yourself. If you prefer, all of these procedures can be performed for you by your authorized STIHL servicing dealer.

WARNING

Remove ignition key prior to performing maintenance on the unit.

To avoid serious injury, perform maintenance on the unit or mower deck only when the engine is stopped and the parking brake is engaged.

Always remove the ignition key, disconnect the spark plug wire(s) and fasten it away from the plug(s) before beginning the maintenance, to prevent accidental starting of the engine.

Troubleshooting Charts

Troubleshooting the Zero-Turn Riding Mower

Problem: Engine will not turnover or start.	
Cause	**Remedy**
Parking brake not engaged.	Engage parking brake.
PTO (electric clutch) switch in ON position.	Place in OFF position.
Ground speed control levers not in "NEUTRAL" position.	Move ground speed control levers to the "NEUTRAL" position.
Out of fuel.	If engine is hot, allow it to cool, then refill the fuel tank.
Engine flooded.	**Carbureted Models:** Move choke control to closed position. **Fuel Injected Models:** See authorized STIHL servicing dealer.
Fuse blown.	Replace fuse.
Battery terminals require cleaning.	Clean the battery terminals.
Battery discharged or dead.	Recharge or replace.
Wiring loose or broken.	Visually check wiring & replace broken or frayed wires. Tighten loose connections.
Solenoid or starter motor faulty.	See authorized STIHL servicing dealer.
Safety interlock switch faulty	Replace as needed. See authorized STIHL servicing dealer.
Spark plug(s) faulty, fouled or incorrectly gapped.	Clean and gap or replace. See engine operator's manual.
Water in fuel.	Drain fuel and replace with fresh fuel.
Gas is old or stale.	Drain fuel and replace with fresh fuel.
Fuel Injected Models: Malfunction in fuel injection system.	See authorized STIHL servicing dealer.

Problem: Engine starts hard or runs poorly.	
Cause	**Remedy**
Fuel mixture too rich.	1.) Clean air filter. 2.) **Carbureted Models:** Check choke adjustment. **Fuel Injected Models:** See authorized STIHL servicing dealer.
Spark plug(s) faulty, fouled or incorrectly gapped.	Clean and gap or replace. See engine operator's manual.

Problem: Engine knocks.	
Cause	**Remedy**
Low oil level.	Check/Add oil as required.
Using wrong grade oil.	See engine operator's manual.

Problem: Excessive oil consumption.	
Cause	**Remedy**
Engine running too hot.	Clean engine fins, blower screen, and air cleaner.
Using wrong weight oil.	See engine operator's manual.
Too much oil in crankcase.	Drain excess oil

Problem: Engine exhaust is black.	
Cause	**Remedy**
Dirty air filter.	Replace air filter. See engine operator's manual.
Carbureted Models: Engine choke control is in closed position.	Move choke control to open position.

Problem: Engine runs but mower will not drive.	
Cause	**Remedy**
Transmissions are not engaged.	Engage the transmissions. See *Pushing the Unit by Hand*.
Belt is broken.	See *Transmission Drive Belt Replacement*.
Drive belt slips.	See problem and cause below.
Brake is not fully released.	See authorized STIHL servicing dealer.

Problem: Unit drive belt slips.	
Cause	**Remedy**
Pulleys or belt greasy or oily.	Clean as required.
Tension too loose	Adjust spring tension. See *Transmission Drive Belt Replacement*.
Belt stretched or worn	Replace belt.

Problem: Brake will not hold.	
Cause	**Remedy**
Brake is incorrectly adjusted.	See *Parking Brake Adjustment*.
Braking pads in transmissions worn.	See authorized STIHL servicing dealer.

Problem: Unit steers or handles poorly.	
Cause	**Remedy**
Steering linkage is loose.	Check and tighten any loose connections.
Improper tire inflation	See *Checking Tire Pressures*.

Troubleshooting the Mower

Problem: Mower will not raise.	
Cause	**Remedy**
Lift linkage not properly attached or damaged.	See authorized STIHL servicing dealer.

Problem: Engine stalls easily with mower engaged.	
Cause	**Remedy**
Engine speed to slow.	Set to full throttle.
Ground speed too fast.	Decrease ground speed.
Cutting height set too low.	Increase the cutting height.
Discharge chute jamming with cut grass.	Cut grass with discharge pointing towards previously cut area.

Problem: Excessive mower vibration.	
Cause	**Remedy**
Blade mounting bolts are loose.	Tighten to 120 ft.lbs (163 Nm).
Mower blades, arbors, or pulleys are bent.	Check and replace as necessary.
Mower blades are out of balance.	Remove, sharpen, and balance blades. See *Servicing the Mower Blades*.
Belt installed incorrectly.	Install belt correctly.

Problem: Excessive belt wear or breakage.	
Cause	**Remedy**
Bent or rough pulleys.	Repair or replace.
Using incorrect belt.	Replace with correct belt.
Incorrect belt tension.	Adjust to correct tension.

Problem: Drive belt slips or fails to drive.	
Cause	**Remedy**
Incorrect belt tension.	Adjust to correct tension.
Drive belt is broken.	Replace with new belt.

Problem: Mower does not engage.	
Cause	**Remedy**
Electrical wiring damage.	Locate & repair damaged wire.
Battery voltage too low.	Charge battery and check alternator. See *Battery Maintenance*.

Troubleshooting Common Cutting Problems

Problem: Streaking	
Streaking is when thin strips of uncut grass are left behind the mower. Streaking is usually caused by operator error or poor blade maintenance.	
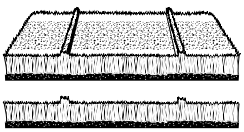	
Cause	**Remedy**
Blades are not sharp.	Sharpen your blades.
Blades are worn down too far.	Replace your blades.
Engine speed is too slow.	Always mow at full throttle.
Ground speed is too fast.	Slow down.
Deck is plugged with grass.	Clean out the mower.

Problem: Streaking	
Not overlapping cutting rows enough.	Overlap your cutting rows
Not overlapping enough when turning.	When turning your effective cutting width decreases–overlap more when turning.

Problem: Scalping	
Scalping is when the mower deck comes close to or hits the ground. Scalping can be caused by the mower deck misadjustment, unevenness in the lawn, or by mower deck bouncing because the ground speed is too fast.	
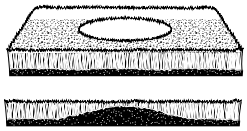	
Cause	**Remedy**
Lawn is uneven or bumpy.	Roll or level the lawn.
Mower deck cutting height is set too low.	Raise the cutting height.
Ground speed is too fast.	Slow down.
Deck is not leveled correctly.	Correctly level the deck.
Tire pressure is low or uneven.	Check and inflate the tires.

Problem: Stepped Cutting	
Stepped cutting is sharp ridges or uneven levels left in the lawn surface. Stepped cutting is usually caused by mower deck damage or misadjustment, or damage to the mower blades.	
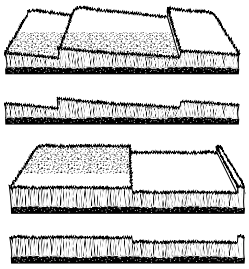	
Cause	**Remedy**
Deck is not leveled correctly.	Level the deck correctly.
Tires are not properly inflated.	Check and inflate the tires.
Blades are damaged.	Replace the blades.
Deck shell is damaged.	Repair or replace the deck.
Mower spindle is bent or loose.	Repair or replace the spindle.
Blades are installed incorrectly.	Reinstall the blades correctly.

Problem: Uneven Cutting	
Uneven cutting is waviness or smooth troughs in the lawn surface. Uneven cutting is usually caused by mower deck damage or misadjustment.	
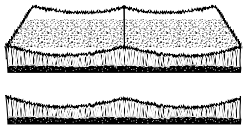	
Cause	**Remedy**
Deck is not leveled correctly.	Level the deck correctly.
Blades are dull or worn.	Sharpen or replace the blades.
Blades are damaged.	Replace the blades.
Deck is clogged with grass clippings.	Clean out the deck.
Deck shell is damaged.	Repair or replace the deck.

Problem: Uneven Cutting	
Mower spindle is bent or loose.	Repair or replace the spindle.
Blades are installed incorrectly.	Reinstall the blades correctly.
Tires are not properly inflated.	Check and inflate the tires.

Problem: Stringers	
Stringers are sparse patches of uncut grass left behind the mower. Stringers are usually caused by operator error or poor blade maintenance.	
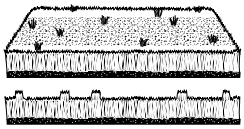	
Cause	**Remedy**
Blades are not sharp or nicked.	Sharpen your blades.
Blades are worn down too far.	Replace your blades.
Engine speed is too slow.	Always mow at full throttle.
Ground speed is too fast.	Slow down.
Deck is plugged with grass.	Clean out the mower.

Specifications

Specifications are correct at time of printing and are subject to change without notice.

ENGINE

For complete engine specifications see the engine manufacturer's operator's manual included with your unit.

Fits models: RZ 752.0i & RZ 760.0i

Briggs & Stratton® 49E877	
Make	Briggs & Stratton®
Model	49E877-0021-G1
Electric System	12 volt, 20 amp alternator; Battery: 340 CCA

Fits models: RZ 752.0i K & RZ 760.0i K in serial number range 935037735 and below.

Kawasaki Fuel Injected FT730V	
Make	Kawasaki
Model	FT730V-CS41-R EFI
Electrical System	12 volt, 30 amp charging coil; Battery: 340 cca

Fits models: RZ 752.0i K & RZ 760.0i K in serial number range 935037736 and above.

Kawasaki Fuel Injected FT730V	
Make	Kawasaki
Model	FT730V-AW05-R EFI
Electrical System	12 volt, 30 amp charging coil; Battery: 340 cca

Fits models: RZ 752.0 K & RZ 760.0 K

Kawasaki FX801V	
Make	Kawasaki
Model	FX801V-FS18-R
Electrical System	12 volt, 15 amp charging coil; Battery: 340 cca

CHASSIS

Fuel Tank Capacity	13.3 gallons (50,68 L)
Rear Wheels	
Tire Size - Models with 52" Deck	24 X 9.5 - 12
Tire Size - Models with 60" Deck	24 X 12 - 12
Inflation Pressure	15 psi (1,03 bar)
Front Wheels	
Tire Size	13 X 6.5 - 6
Inflation Pressure	25 psi (1,72 bar)

TRANSMISSIONS

Make	Hydro-Gear®
LH Model (Models with 52" Decks)	1710-1024L (LH)
RH Model (Models with 52" Decks)	1710-1024R (RH)
LH Model (Models with 60" Decks)	1710-1057L (LH)
RH Model (Models with 60" Decks)	1710-1057R (RH)
Type	ZT-4400 Transaxles
Hydraulic Fluid	SAE 20W-50 motor oil
Speeds @ 3400 rpm	Forward: 0-10 MPH (0-16.09 km/h)
	Reverse: 0-5 MPH (0-8.05 km/h)

DIMENSIONS

Models with 52" Mower Decks	
Overall Length	89" (226 cm)
Overall Width (with discharge chute up)	57" (145 cm)
Overall Width (with discharge chute down)	67" (170 cm)
Height	72-1/2" (184,2 cm)

Models with 60" Mower Decks	
Overall Length	89" (226 cm)
Overall Width (with discharge chute up)	61-1/2" (156,2 cm)
Overall Width (with discharge chute down)	75" (190,5 cm)
Height	72-1/2" (184,2 cm)

Limited Warranty

STIHL Incorporated Limited Warranty Policy

This product is sold subject to the STIHL Incorporated Limited Warranty Policy, available at www.stihlusa.com/warranty.html. It can also be obtained from your authorized STIHL servicing dealer or by calling 1-800-GO-STIHL (1-800-467-8445).

If your unit is equipped with a dual function hour meter that displays both engine hours and PTO hours, warranty coverage is based on the engine hours as displayed by the hour meter.

Notes

Notes

STIHL